DESCH

SMART DRIVE SOLUTIONS

DESCH DRIVE- AND SYSTEM SOLUTIONS

for machine tools

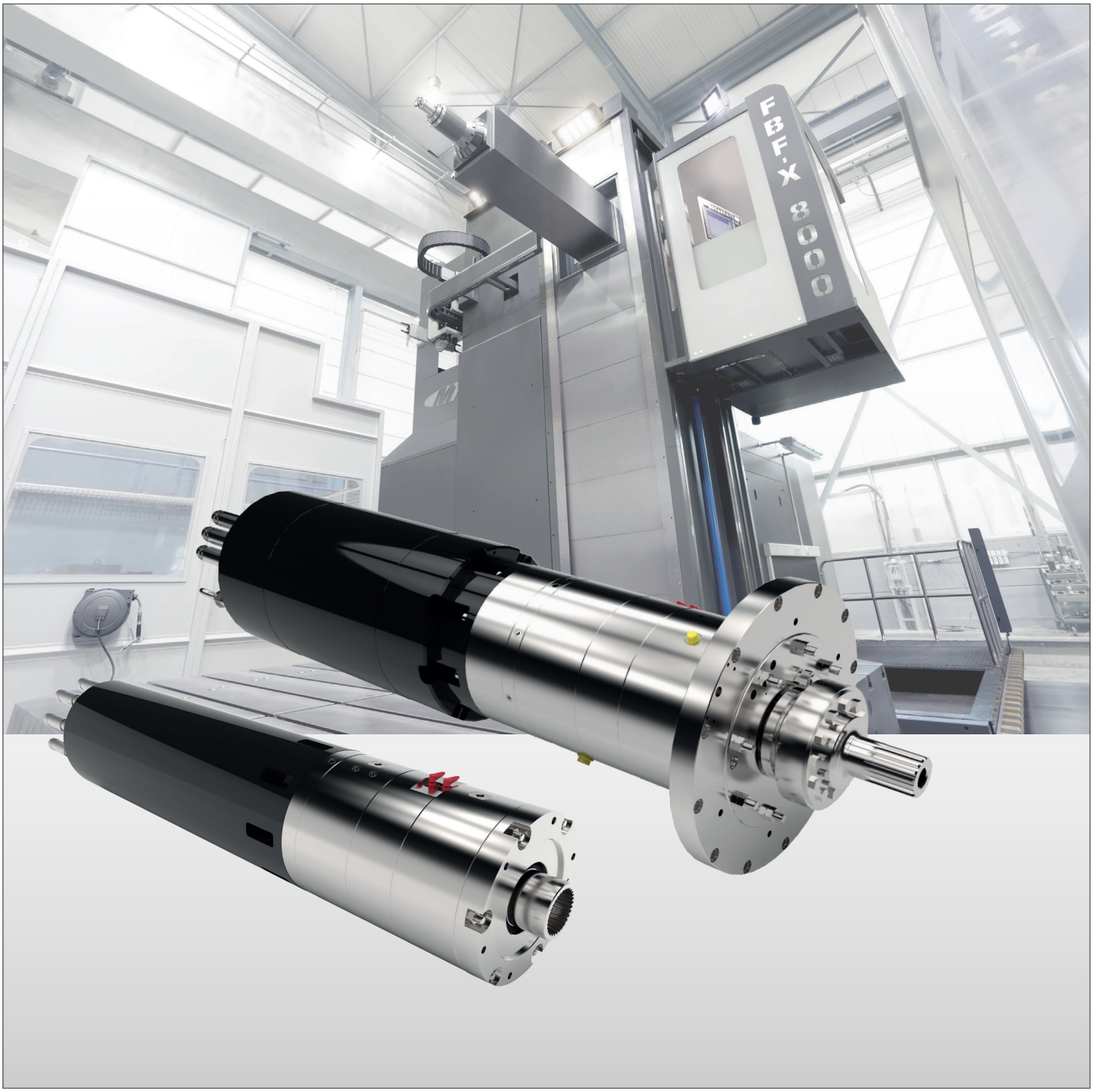

DESCH DRIVE AND SYSTEM SOLUTIONS FOR MACHINE TOOLS

As a competence leader in the development and manufacturing of complex, customized drive systems, DESCH supplies planetary and special gear units as well as complete series concepts for cutting, splitting and forming machine tools.

As a system supplier for drive solutions, DESCH also offers a comprehensive product range consisting of complete RAM solutions, motor- and electrospindles, machining heads, measuring systems for condition monitoring and drive servicing.

The entire DESCH product portfolio combines decades of know-how with the use of a state-of-the-art machine park and thus, guarantees quality at the highest level.

THE NEXT LEVEL OF MACHINE TOOL DRIVES

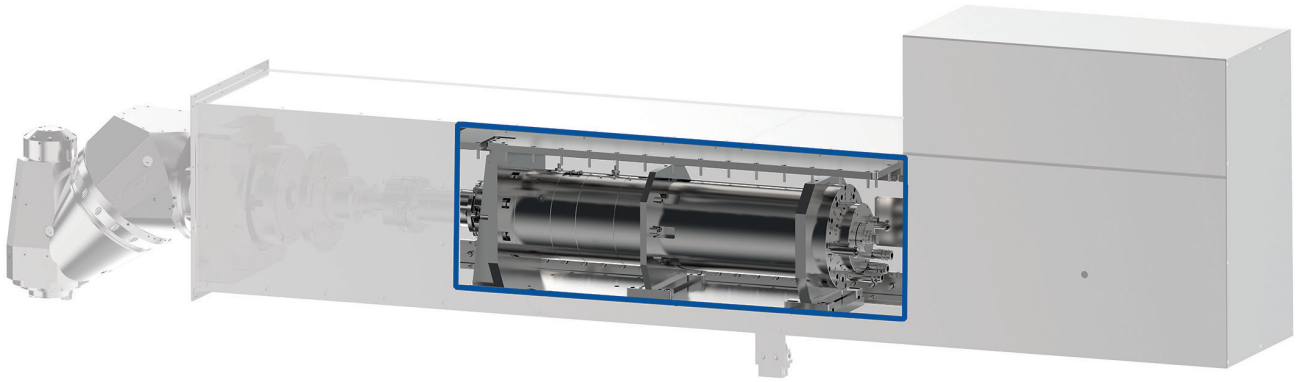

Complete solutions consisting of motor and gearbox as innovative "inline" main spindle drive solution.

THE SOLUTION FOR EVERY DRIVE

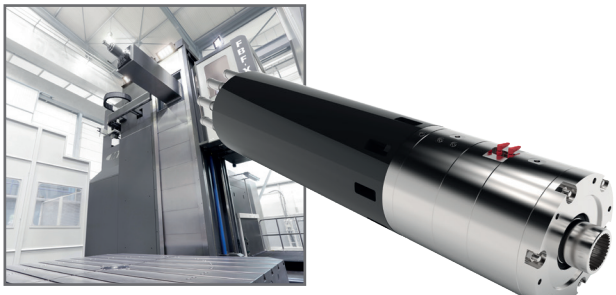

Inline main spindle drives

- **Product-Solution**
  Motor Gearbox Units
- **Machine Application**
  Milling-drilling machines, machining centers, vertical lathes

see page 4

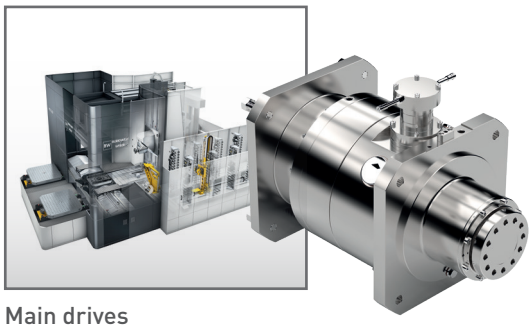

Main drives

- **Product-Solution**
  Variations of planetary and / or spur gear units in different designs
- **Machine Application**
  Machining centers, milling-drilling machines, thread rolling machines, sawing machines, shears, wheel set machining centers, deep drilling machines, gear cutting machines

see page 6

Rotary table drives

- **Product-Solution**
  Motor-gearbox combinations, planetary gearboxes and planetary bevel gear combinations
- **Machine Application**
  Vertical lathes, horizontal lathes

see page 8

RAM solutions + accessories/ electrospindles

- **Product-Solution**
  Motor-gear-spindle units, electrospindles and tool heads
- **Machine Application**
  Milling-drilling machines, machining centers, vertical and horizontal lathes, grinding machines

see page 10

Condition Monitoring Systems

- **Product-Solution**
  Concepts for condition-based monitoring
- **Application**
  Configurable for any product

see page 11

Inline main spindle drives

DESCH Denox® BASE / FLEX - LINE

Motor gear units as main spindle drives

The motor gearbox series DESCH Denox® has been modularly extended by the new design lines Denox® BASE-Line and Denox® FLEX-Line. The Denox® BASE-Line stands for the standardized motor-gearbox variant in pre-configured design, which is characterized by high availability at series price level. The Denox® FLEX-Line represents the idea of a customer-specific configurable drive solution, which has always been lived at DESCH.

Denox® BASE-Line - Standardized series

General
- Stocked components -> high availability
- Prepared for vertical and horizontal installation position
- Fixed installation dimensions
- Integrated cooling lubricant tube
- Media supply via motor B-side (e.g. lubricating and shifting oil)

Motor
- Defined motor variants
- Defined mounting flange and centering

Planetary gearbox
- Shaft diameter range pre-selected
- Defined output flange with selectable internal centerings
- Gear ratio i = 1 / 5
- Integrated temperature sensor system and switching position sensing
- 1-stage variant
- Hydraulically switchable

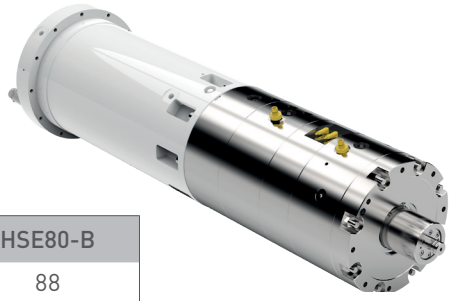

Rated data			HSE40-B	HSE60-B	HSE80-B
Power	P	kW	40	65	88
Rated speed motor	n	min^{-1}	1.520	1.535	1.270
Max. output speed	n2 max.	min^{-1}	7.000	6.000	4.500
Rated torque (S1-100%)	T2	Nm	1.250	2.025	3.325

Denox® FLEX-Line - Customized series

General
- Individually configurable
- Specific adaptation to installation situation
- Variable media supply (axial and/or radial)

Motor
- Motor design and version on request
  Optional features:
- Integrated tool release system (drawbar)
- Rotary union in different performance executions

Planetary gearbox
- Different flange designs can be realized
- Variable design of gearbox output shaft
- Housing can be modified (e.g. foot design)
- Other gear ratios on request
  Optional features:
- Temperature and vibration sensors
- Torque measuring system DESCHtorque
- Housing jacket cooling of the gearbox
- 1-stage version
- Hydraulically shiftable

Rated data			HSE40-F	HSE60-F	HSE80-F	HSE100-F
Power	P	kW	40 - 50	60 - 70	80 - 90	100 - 120
Rated speed motor	n	min^{-1}	depending on configuration			
Max. output speed	n2 max.	min^{-1}	8.000	7.000	4.500	4.500
Rated torque (S1-100%)	T2	Nm	1.200 - 1.500	2.000 - 3.000	3.300 - 4200	4.000 - 5.200

More information about the Denox® BASE-/FLEX -Line:

Download
BASE-/FLEX-Line catalogue

DESCH Denox® HS SERIES

Multi-stage motor gear units

The extremely powerful and compact drive units of the Denox® HS series are used as multi-stage main spindle drives for machine tools in vertical and horizontal installation position. The series unifies the customer-specific individuality of the Denox® FLEX-Line with higher torque transmissions at the same time. In addition to the power ranges shown below, special sizes up to 200 kW can also be realized.

General
- Individually configurable
- Specific adaptation to installation situation
- Variable media supply (axial and/or radial)

Motor
- Motor design and version on request

  Optional Features:
- Integrated tool release system
- Rotary union in different performance executions

Planetary gearbox
- Different flange designs can be realized
- Variable design of gearbox output shaft
- Housing can be modified (e.g. foot design)
- Other gear ratios on request

  Optional features:
- Temperature and vibration sensors
- Torque measuring system DESCHtorque
- Housing jacket cooling of the gearbox

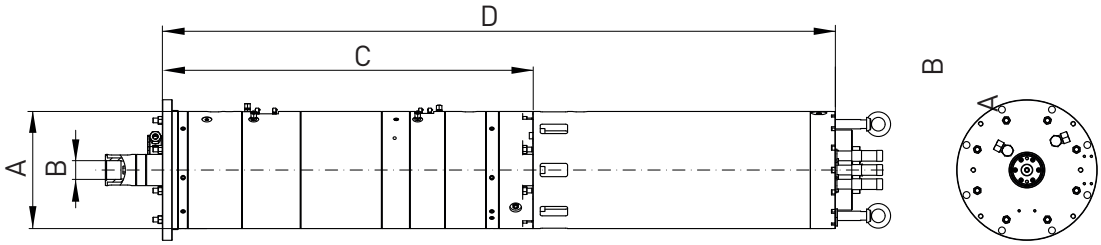

Rated Data			HS60	HS80	HS100	HS120	HS140
Power	P	kW	60	80	104	125	140
Rated motor speed	n	min^{-1}	depending on configuration				
Max. output speed	n2 max.	min^{-1}	6.000	4.500	4.500	4.500	4.000
Gear ratio [1]	i		1,00 / 4,00 / 14,17	1,00 / 3,50 / 12,80	1,00 / 4,50 / 15,88	1,00 / 4,00 / 14,17	1,00 / 4,00 / 16,00
Rated torque (S1-100%)	T2	Nm	5.500	8.300	9.300	11.300	16.000
Outer diameter	A	mm	260	300	350	350	400
Total length of the unit [2]	D	mm	1.750	1.800	1.700	1.700	2.000

Other gear ratio [1] on request.
[2] Excl. motor - different motor type variants on request.
The above specifications and dimensions may vary due to the motor used in the application and the mounting position.

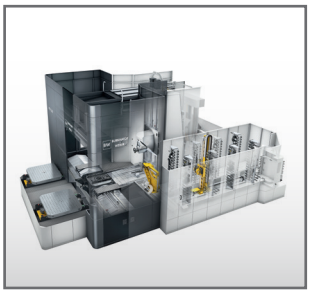

Main drives

DESCH MAIN DRIVES

Individual product solutions for every application

DESCH main drives for **milling, drilling and multi-machining centers** are characterized by a high power density in a small installation space. The product solutions can be individually configured and combined for the specifics of each application.

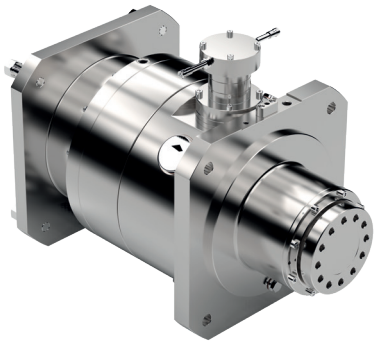

2-speed gearbox

General
- Horizontal mounting position
- Single-stage planetary gear units

Gear unit features
- Input side flange adaptable to motor
- Output side can be customized
- Housing configurable
- Gear shifting hydraulic or electric
- Media supply selectable
- Start from an output torque of T2 = 1,000 Nm

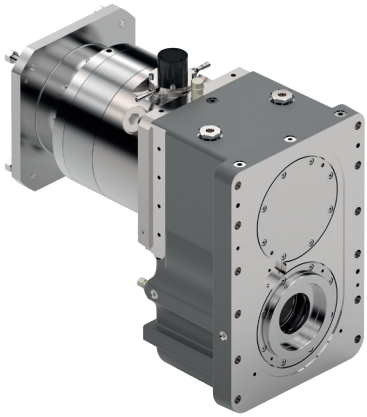

2-speed gearbox with spur gear stage

General
- Horizontal mounting position
- Combination of single planetary stage gear unit and spur gear unit

Gear unit features
- Input side flange adaptable to motor
- Output side can be customized
- Housing configurable
- Gear shifting hydraulic or electric
- Media supply selectable
- Center distance individually adaptable
- Start from an output torque of T2 = 1,000 Nm

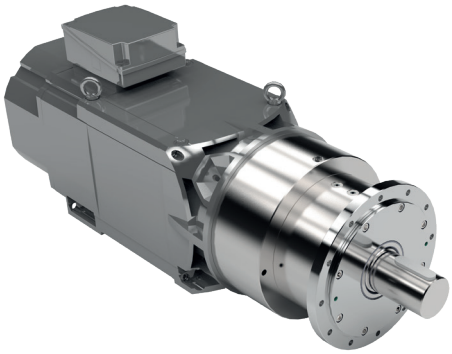

Standard motor with planetary gear

General
- Horizontal and/or vertical mounting position
- Single-stage planetary gears optionally with drive motor
- Motor brand individually selectable

Gear unit features
- Input side flange adaptable to motor
- Output side can be customized
- Housing configurable
- Media supply selectable

The DESCH special drives for the applications **sawing, deep hole drilling, wheel set machining and gear cutting** complete the portfolio of the main drives for the metal cutting manufacturing processes. Depending on the machine application, the product solutions are characterized by their high running accuracies as well as special adjustment mechanisms for adapting the gear backlash.

In addition to the wide range of drive solutions for cutting machine tools, DESCH also offers a special product range for the splitting and forming machine tool sector. These drives are used in the application areas of shearing, rolling and bending machines. These products stand for a low backlash design and equally high torque capacity in a small installation space.

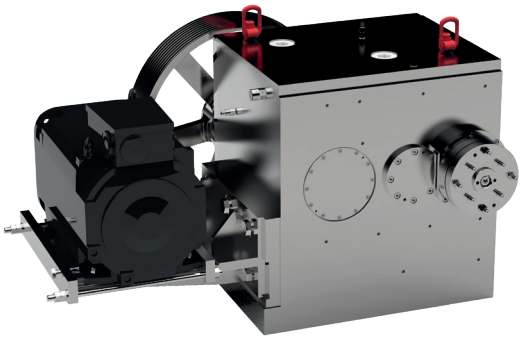

Spur gear units

General
- Horizontal mounting position
- Single or multi-stage spur gear units
- Optionally with drive motor and belt drive

Gear unit features
- Output side can be customized and optionally designed for sawing machines with blade support
- Housing configurable
- Adjustment mechanism to reduce gear backlash

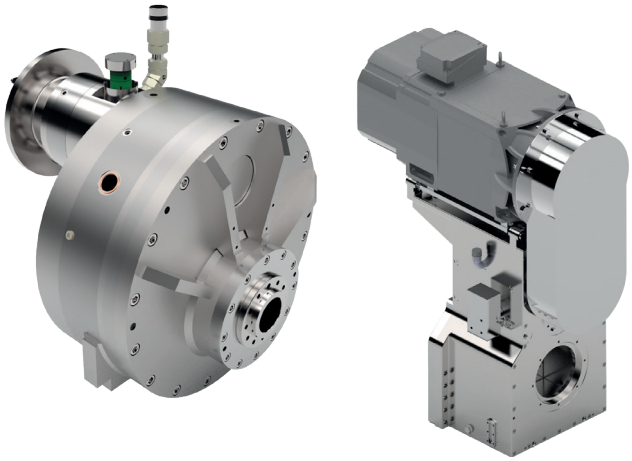

Switchable planetary spur gearboxes

General
- Horizontal mounting position
- Combinations of planetary and spur gear units possible
- Optionally with drive motor
- Motor brand freely selectable

Gear unit features
- Input side flange adaptable to motor
- Output side can be customized
- Housing configurable
- Gear shifting hydraulic or electric
- Media supply selectable
- High precision bearings at output for highest running accuracies and absorption of cutting forces

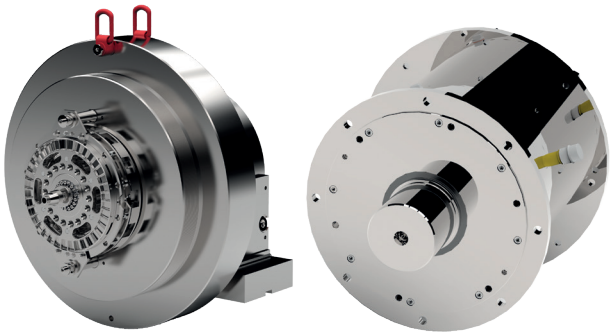

Planetary gear

General
- Horizontal and/or vertical mounting position
- Single-stage planetary gear units optionally with drive motor
- Motor brand freely selectable

Gear unit features
- Input side flange adaptable to motor
- Output side can be customized
- Housing configurable
- Optionally with reduced gear backlash to minimize torsional angle
- Integration of a flywheel with clutch-brake combination for engaging and disengaging the drive train

Rotary table drives

DESCH Denox® ROTARY TABLE DRIVES

Efficient rotary table drives for versatile applications

The DESCH Denox® DT product family of rotary table drives offers customized drive solutions, tailor-made for horizontal as well as vertical face plates. In addition to electric or integrated hydraulic circuits, drives can be designed in combination with a bevel gear stage, belt drive or as a direct motor version, depending on the specific requirements.

VERTICAL APPLICATIONS

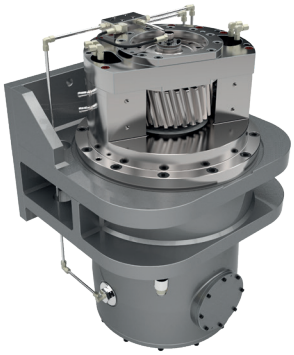

Denox® DT - Type K - Shiftable bevel planetary gear units

Rated data			
Power	P	kW	40 - 130
Max. input speed	n1 max.	min^{-1}	up to 5.000
Max. output speed	n2 max.	min^{-1}	up to 2.300
Gear ratio	i		Bevel gear stage 2,2; Planetary stage 1 / 5 or customized
Rated torque (S1-100%)	T2	Nm	up to 12.000

Denox® DT - Type R - Shiftable planetary gear units with belt drive

Rated data			
Power	P	kW	40 - 130
Max. input speed	n1 max.	min^{-1}	up to 2.200
Max. output speed	n2 max.	min^{-1}	up to 2.200
Gear ratio	i		Planetary stage 1 / 5 or customized
Rated torque (S1-100%)	T2	Nm	up to 12.000

Denox® DT - Typ DM - Shiftable planetary gearboxes with direct motor

Rated data			
Power	P	kW	up to 130
Max. input speed	n1 max.	min^{-1}	up to 2.500
Max. output speed	n2 max.	min^{-1}	2.500
Gear ratio	i		Planetary stage 1 / 5 or customized
Rated torque (S1-100%)	T2	Nm	up to 12.000 (multistage up to 28.000)

The DESCH Denox® DT rotary table drives are characterized by their space-optimized performance. The output can be designed in the three different type variants S, H and W as required (see below). By using them as single or master-slave double drives, the rotary table drives can be used both for turn-mill operations and also for positioning.

HORIZONTAL APPLICATIONS

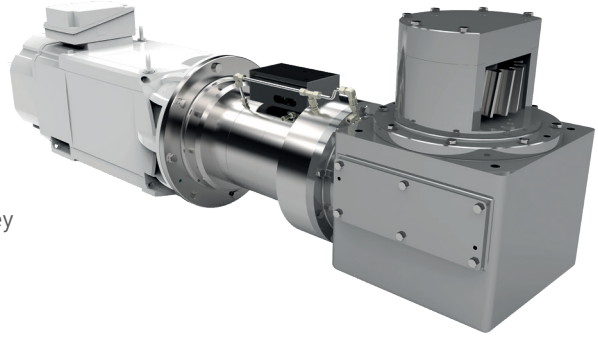

Denox® DT-ECO - Switchable planetary bevel gearboxes

Available in three different output side designs:
Type S = Gear, **Type H** = Internal DIN5480 spline, **Type W** = Straight shaft with key

Related to the output torque in the ranges of
2,500 Nm, 5,000 Nm and 9,000 Nm available.

Rated Data			
Power	P	kW	depending on motor selection
Max. input speed	n1 max.	min^{-1}	up to 6.000
Max. output speed	n2 max.	min^{-1}	up to 3.000
Gear ratio	i		Bevel gear stage 2 or 2,2; Planetary stage 1 / 4 or customized
Rated torque (S1-100%)	T2	Nm	up to 9.000

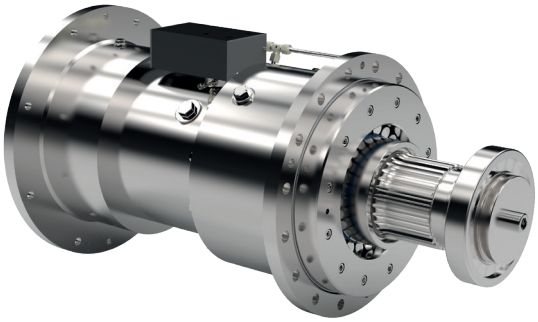

Denox® DT - Type HL - Single or multi-stage planetary gear units

Available in three different output side designs:
Type S = Gear, **Type H** = Outer DIN5480 spline, **Type W** = Straight shaft

Rated Data			
Power	P	kW	300
Max. input speed	n1 max.	min^{-1}	up to 4.500
Max. output speed	n2 max.	min^{-1}	up to 2.000
Gear ratio	i		Planetary stage 1 / 4 ; 1 / 5 ; 1 / 6 or customized
Rated torque (S1-100%)	T2	Nm	up to 35.000

RAM solutions + accessories/ electrospindles

DESCH MOTOR - GEARBOX - SPINDLE - UNIT Denox® MGS & ACCESSORIES

The inline complete solution and its accessories

DESCH Denox® MGS units are complete solutions consisting of all relevant core components. These include water-cooled synchronous motors, hydraulically switchable planetary gearboxes as well as machining spindles with selectable tool holding fixtures in ISO-BT-HSK-CAPTO versions, which are required for a powerful drive solution. The basic components of the extremely compact main spindle series are available in 4 sizes up to a power range of 137 kW. Further features can be customized. A special feature is the optionally available and pre-configured tool head interface with hydromechanical hydrodock clamping, which can be combined with a large number of machining heads.

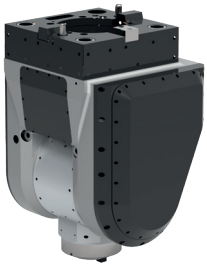

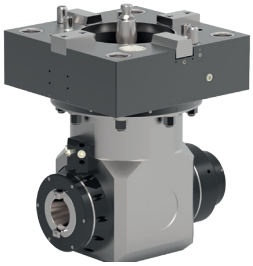

- Mechanical heads
- Heads with electrospindles

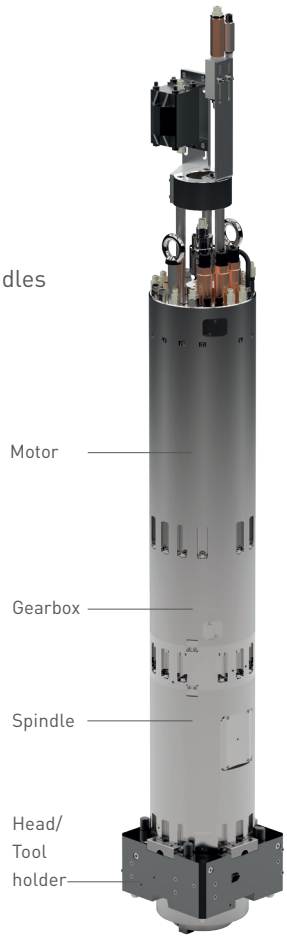

Denox® MGS - Series

Rated data			
Motor power	P	kW	up to 137
Housing diameter	D	mm	240-400
Max. output speed	n2 max.	min^{-1}	up to 10.000
Gear ratio	i		Planetary stage 1 / 4,5 and 1 / 5
Rated torque (S1-100%)	T2	Nm	up to 7.000

ELEKTROSPINDLES

The electrospindle program offers customized drive solutions for milling, turning and grinding machines. The electrospindles are designed with synchronous or asynchronous build-in motors and can be flexibly designed according to customer requirements.

Elektrospindles

Rated data			
Motor power	P	kW	up to 200
Housing diameter	D	mm	up to 1.000
Max. speed	n	min^{-1}	up to 30.000
Rated torque (S1-100%)	T	Nm	up to 1.500

More information about these products:

Download
Spindle systems for machine tools

imatecno.com

Products in cooperation with IMA TECNO

Condition Monitoring Systems

DESCH CONDITION MONITORING SYSTEMS

Keeping an eye on the condition of your drive

Optimize the performance of your gearboxes in the long term with our advanced condition monitoring solutions. Customized integration of a wide range of sensors allows to continuously monitor the condition of your drive and thus detect potential problems at an early stage. By identifying wear, overload or other faults at an early stage, expensive downtime and repair costs can be avoided. Rely on our innovative technology and maximize the availability of your drive. Contact us to learn more about our condition monitoring solutions for gearboxes.

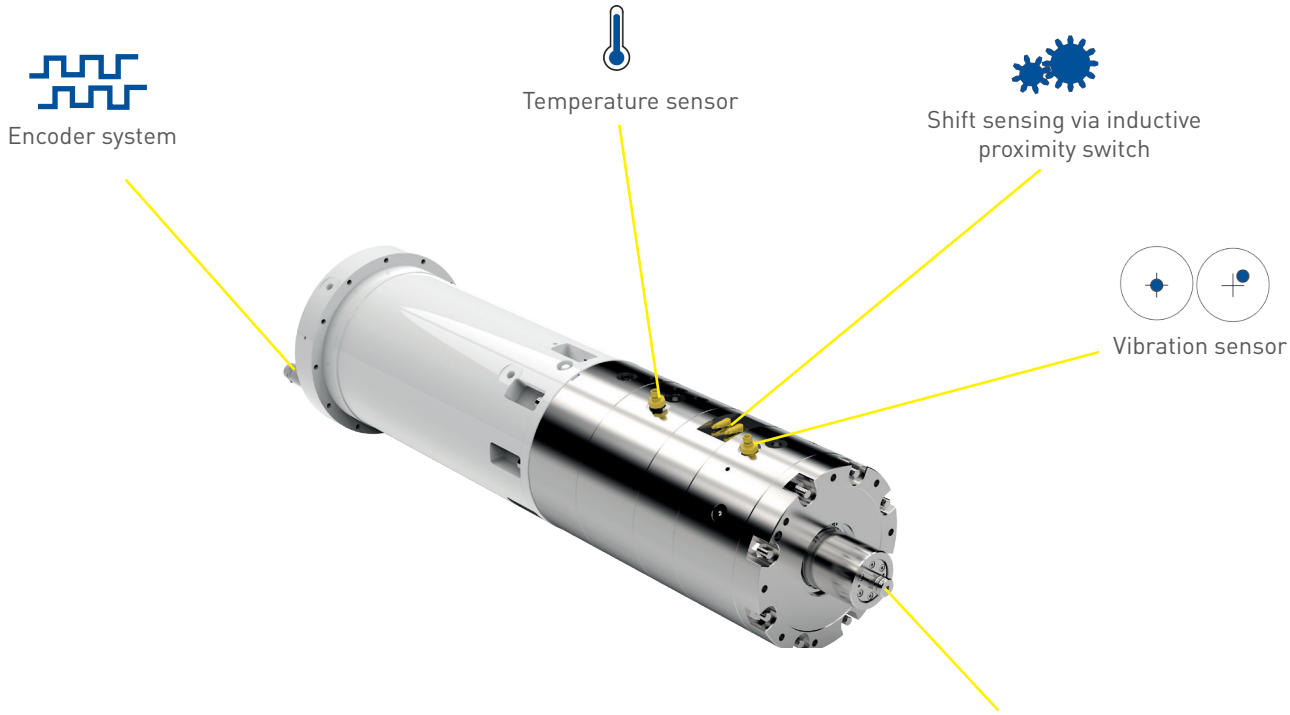

DESCH App

Visualization of live data on your smartphone

The DESCH App is a solution for efficient monitoring and maintenance of the drive. With our app you have a live visualization of important parameters such as torque, speed and pressure always in view. The app provides you with extensive access to live and history data and enables early detection of problems by outputting error messages.

DESCHtorque

Torque sensor

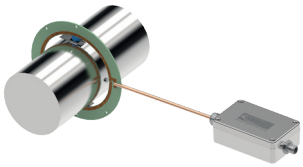

DESCHtorque is a measuring system for recording static and dynamic torques in the drive train. It is cost-effective and very compact. Equipped with this system, process sequences can be precisely monitored.

More information about the DESCHtorque measuring

Download
DESCHtorque Flyer

SMART DRIVE SOLUTIONS

CONTACT

DESCH Canada Ltd.
240 Shearson Crescent
Cambridge
Ontario
Canada N1T 1J6
T +1800 2631866
+1519 6214560
F +1519 6231169
desch.canada@desch.com

DESCH USA LP
Manufacturing,
Assembly
4940 Merrifield Pkwy
Dallas, Texas
75236
T +1 330 937 9030
F +1 330 937 9031
desch.dallas@desch.com

DESCH USA LP
Sales, Engineering,
Service Support
3700 Embassy Pkwy,
Suite 530 Akron Ohio
44333
T +1 330 937 9030
F +1 330 937 9031
sales.usa@desch.com

Technical changes reserved · © DESCH North America GmbH & Co. KG ·