SMART DRIVE SOLUTIONS

DESCH Servox® Brake WRB

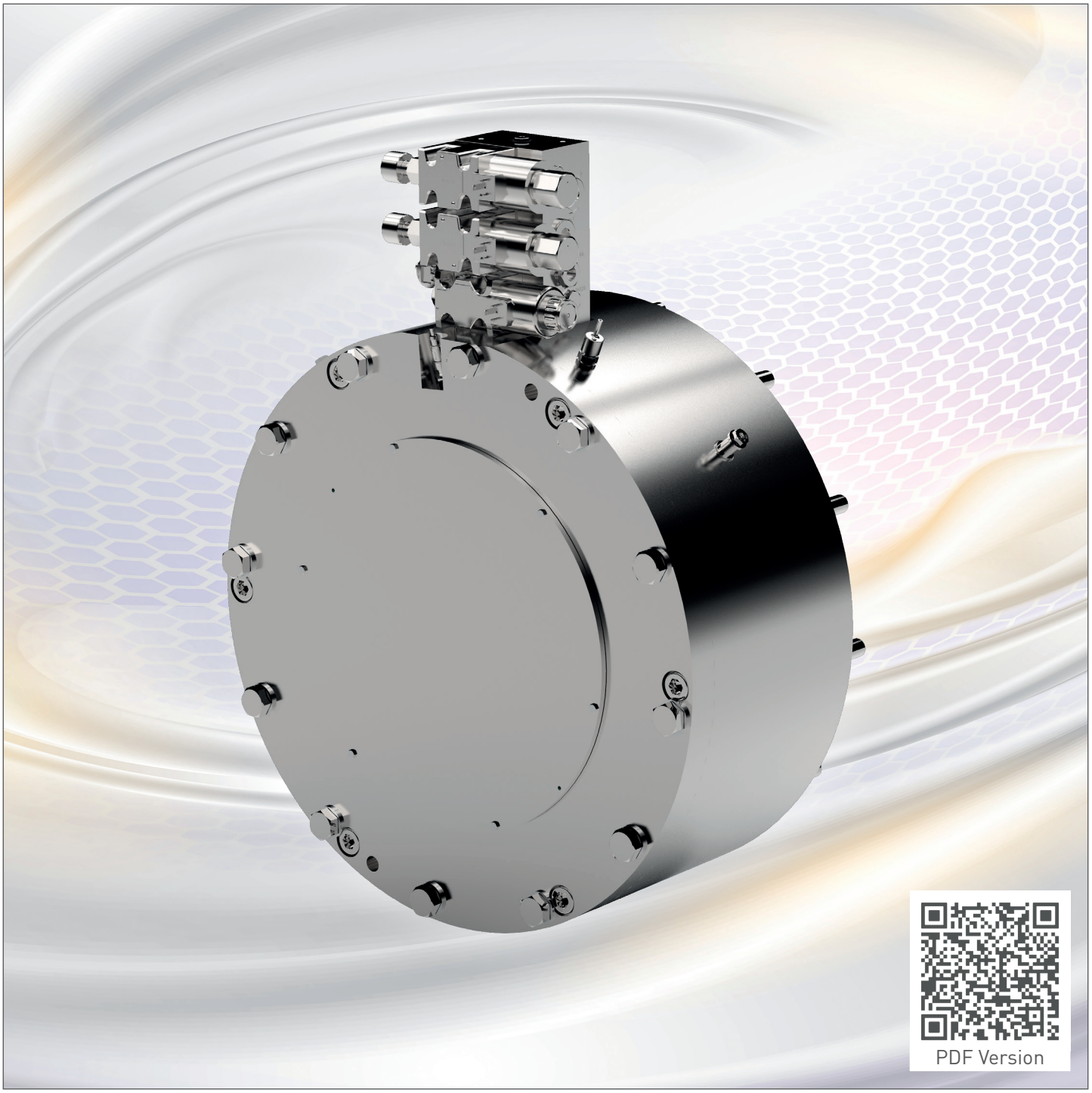

DESCH Servox® WRB - Wet Running Brake

Press drives on modern servo presses are subjected to the highest security requirements. These presses are driven by large servo motors and have individual press characteristics. A high dynamic requirement profile.

DESCH supplied almost 500 Servox® drives in the last 10 years for this type of application. In addition to the planetary gearbox, the presses are always equipped with an integrated servo brake as a holding device with emergency stop function.

With our detailed and long standing experience in servo technology, DESCH has developed a separate servo brake - our new Servox® WRB series. This series complies with the latest safety requirements according to DIN EN ISO 16092-2, is free of friction corrosion and Industry 4.0 ready.

This WRB series includes two design options, WRB-F and WRB-I. The WRB-F type as a solution mounted on a free shaft end or on the B side of the servo motor. The WRB-I type is integrated between servo motor and machine.

The holding torques of each brake are designed in line with the market requirements for servo presses. The brake withstands possible high thermal loads in dynamic braking situations of the press, especially in emergency situations, power failures, in supporting the servo motor or for protection of your press transfer. The wet running system makes it possible. Also dynamic brake tests can be realised without additional wear.

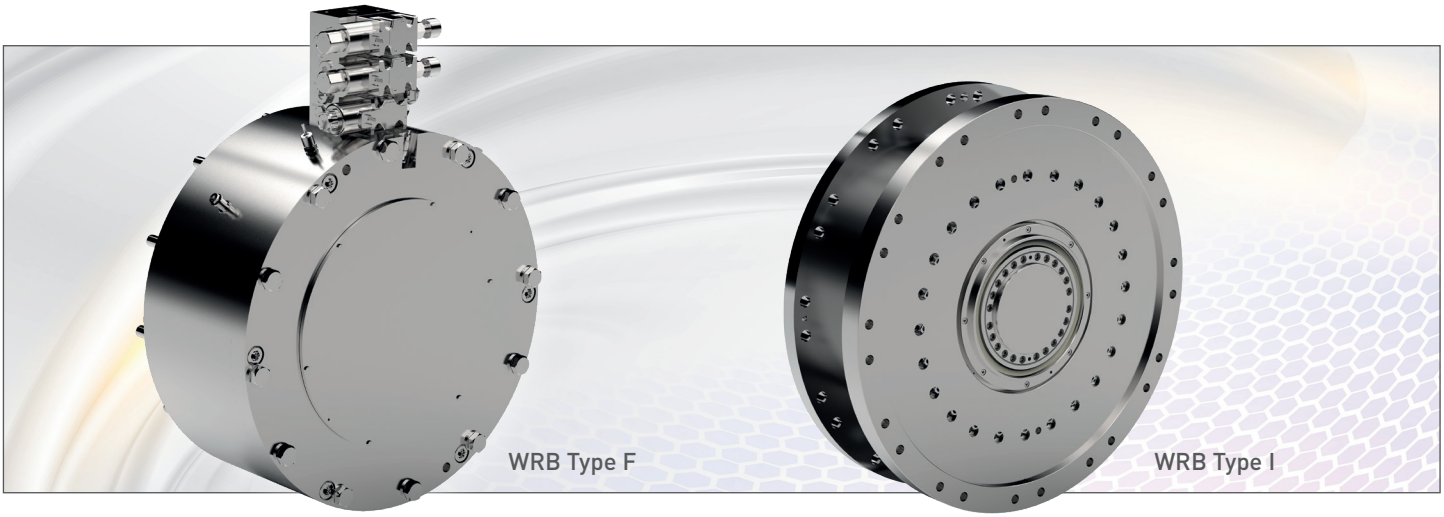

Description

- Static holding brake with emergency stop function
- Hydraulically released, spring applied
- Diameter compatible with most competitive brakes
- Friction material steel / sinter, wet running
- Free of wear
- No influence of an oily environment to the static holding torque
- Dynamic braking stops possible
- Low inner moment of inertia
- Free of friction corrosion
- Possible hub-shaft connections, e.g. spline, clamping devices
- CE marking
- According to DIN EN ISO 16092-2 compliant
- Industry 4.0 ready

Field of Application

- Servo motor driven, mechanical presses
- Generally use as a static holding brake and an additional dynamic brake in emergency stop situations

Installation Options

- Integrated solution between servo motor and machine
- Flanged solution mounted on a free shaft end or on the B side of the servo motor

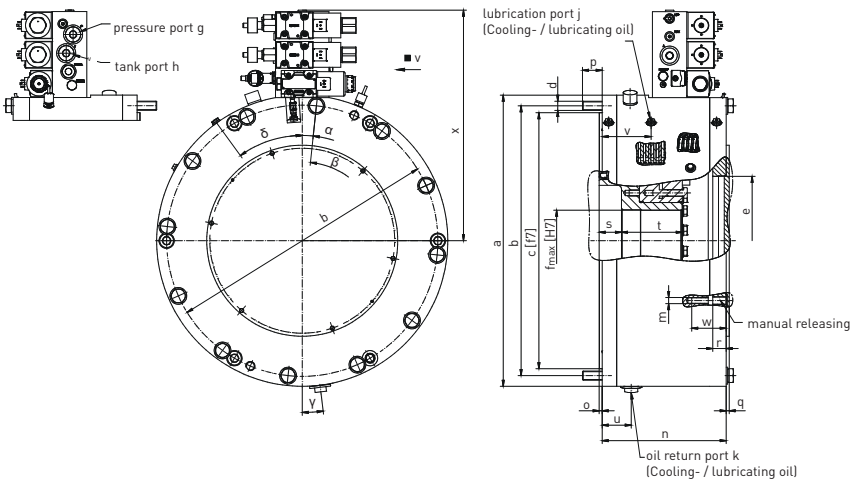

DESCH Servox® Brake WRB Type F

Brake Size			WRB F 30 - X	WRB F 60 - X
X=1	Static holding torque	T_{stat} [Nm]	30.000	60.000
	Dynamic brake torque	T_{dyn} [Nm]	21.000	42.500
	Min. release pressure	p_{min} [bar]	50	35
X=2	Static holding torque	T_{stat} [Nm]	25.000	54.000
	Dynamic brake torque	T_{dyn} [Nm]	17.900	38.500
	Min. release pressure	p_{min} [bar]	40	30
X=3	Static holding torque	T_{stat} [Nm]	21.000	45.000
	Dynamic brake torque	T_{dyn} [Nm]	15.000	32.000
	Min. release pressure	p_{min} [bar]	35	26
X=4	Static holding torque	T_{stat} [Nm]	-	38.000
	Dynamic brake torque	T_{dyn} [Nm]	-	27.000
	Min. release pressure	p_{min} [bar]	-	22
	Max. release pressure	p_{max} [bar]	100	100
	Max. speed in idle run	$n_{max, idle\ run}$ [rpm]	1.400	1.100
	Max. brake speed**	$n_{max, brake}$ [rpm]	-	-
	Oil release volume in new conditions	$V_{h, new}$ [cm³]	240	770
	Lubrication oil volume	$V_{Öl}$ [l/min]	8,0	14,0
	Oil type		CLP / HLP	CLP / HLP
	Oil viscosity***	ISO-VG:	46 - 150	46 - 150
	Inner moment of inertia	J_{inner} [kgm²]	1,06	4,94
	Weight	ca. m [kg]	380	830
	a	[mm]	548	762
	b	[mm]	508	710
	c [f7]	[mm]	480	670
	d	[mm]	12 x M20	12 x M24
	e	[mm]	230	337
	f_{max}[H7]	[mm]	130	160
	g / h	[mm]	G3/4"	G1"
	j	[mm]	G3/8"	G3/8"
	k	[mm]	G1 1/2"	G 1 1/2"
	m	[mm]	4 x M12	4 x M16
	n	[mm]	261	324,5
	o	[mm]	6	8
	p	[mm]	36	51,5
	q	[mm]	8	8
	r	[mm]	31	35
	s	[mm]	0	58,5
	t	[mm]	140	159
	u	[mm]	87	76
	v	[mm]	137	128
	w	[mm]	56	90
	x	[mm]	441	604

X = spring setting ** Max. brake speed according to thermal calculation *** Other oil viscosities possible on demand
Different shaft connections possible. Clamping devices, splines

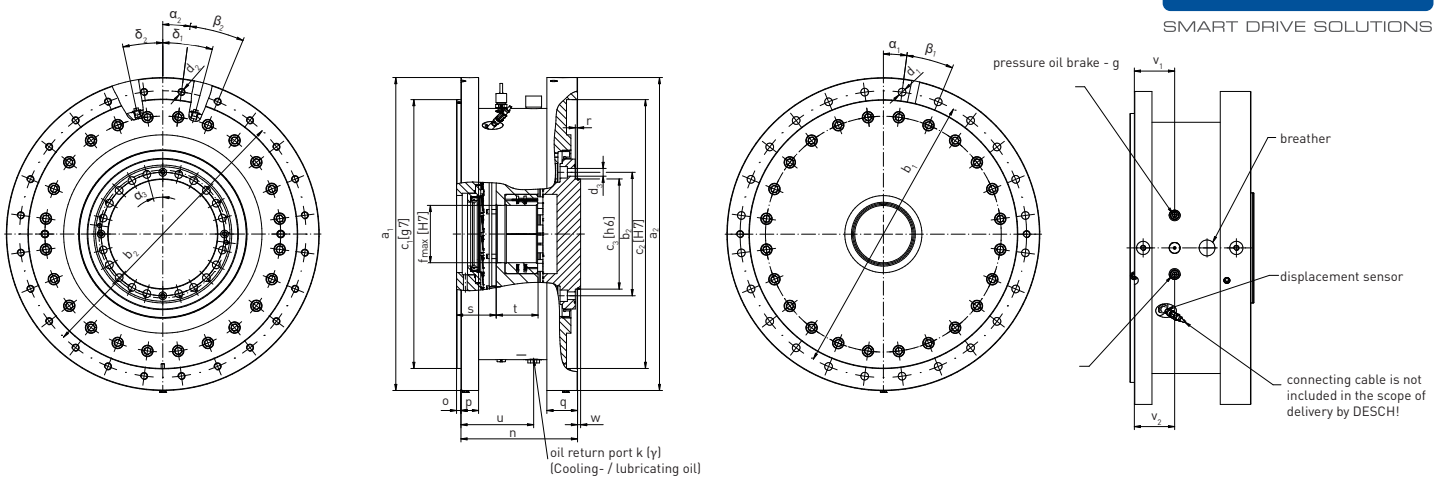

DESCH Servox® Brake WRB Type I

	Brake Size		WRB I 10 - X	WRB I 20 - X	WRB I 50 - X
	Siemens motor SIMOTICS		T-1FW3 20...	T-1FW3 28...	T-1FW4 40...
X=1	Static holding torque	T_{stat} [Nm]:	8.900	19.100	46.600
	Dynamic brake torque	T_{dyn} [Nm]	5.230	11.190	27.200
	Min. release pressure	p_{min} [bar]	35	35	38
X=2	Static holding torque	T_{stat} [Nm]	5.100	12.700	-
	Dynamic brake torque	T_{dyn} [Nm]	2.990	7.460	-
	Min. release pressure	p_{min} [bar]	20	25	-
X=3	Static holding torque	T_{stat} [Nm]	3.800	9.500	-
	Dynamic brake torque	T_{dyn} [Nm]	2.240	5.600	-
	Min. release pressure	p_{min} [bar]	15	20	-
X=4	Static holding torque	T_{stat} [Nm]	-	6.300	-
	Dynamic brake torque	T_{dyn} [Nm]	-	3.730	-
	Min. release pressure	p_{min} [bar]	-	15	-
	Max. release pressure	p_{max} [bar]	60	60	60
	Max. speed in idle run	$n_{max, idle\ run}$ [rpm]	1.900	1.400	700
	Max. brake speed**	$n_{max, brake}$ [rpm]	-	-	-
	Oil release volume in new conditions	$V_{h, new}$ [cm³]	101	188	414
	Lubrication oil volume	$V_{Öl}$ [l/min]	3,5	5,0	11,0
	Oil type		CLP / HLP	CLP / HLP	CLP / HLP
	Oil viscosity***	ISO-VG	46 - 150	46 - 150	46 - 150
	Inner moment of inertia	J_{inner} [kgm²]	0,52	1,41	4,02
	Weight	ca. m [kg]	335	528	1.317
	a_1 / a_2	[mm]	550	710	1.150
	b_1 / b_2	[mm]	500	650	1.080
	b_3	[mm]	170	280	285
	c_1[g7] / c_2[H7]	[mm]	450	610	1.000
	c_3 [h6]	[mm]	153	250	250
	d_1	[mm]	16 x Ø13,5	24 x Ø17,5	24 x Ø33
	d_2	[mm]	16 x M12	24 x M16	24 x M30
	d_3	[mm]	12 x Ø13,5	24 x Ø17,5	24 x Ø22
	f_{max} [H7]	[mm]	75	130	170
	g	[mm]	G 1/4"	G 1/4"	G 1/4"
	h	[mm]	G 1/4"	G 1/4"	G 1/2"
	k	[mm]	G 3/4"	G 1"	G 1 1/4"
	n	[mm]	241	274,5	338
	o	[mm]	10	10	10
	p	[mm]	30	40	50
	q	[mm]	65	69,5	69,5
	r	[mm]	5	5	0
	s	[mm]	76	90	133
	t	[mm]	97	95	109
	u	[mm]	151	165	195
	v_1	[mm]	83	91,5	111
	v_2	[mm]	91	91,5	111
	w	[mm]	7	7	12

X = spring setting ** Max. brake speed according to thermal calculation *** Other oil viscosities possible on demand
Different shaft connections possible. Clamping devices, splines

Industry 4.0
Condition Monitoring / Predictive Maintenance

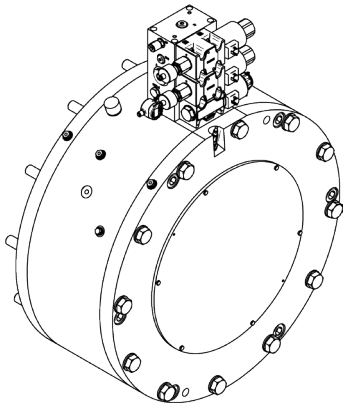

- Temperature sensor→ monitoring of the brake temperature, brake failure warning and protection against damages
- Piston position and displacement sensor → redundant monitoring of the switch position brake on / off (in powertrain) and measuring the piston path for wear and reaction time monitoring of the brake
- Optional press safety valve PSV size NG10 and 16 according to the latest safety requirements of DIN EN ISO 16092-2
- DESCH app will be coming soon

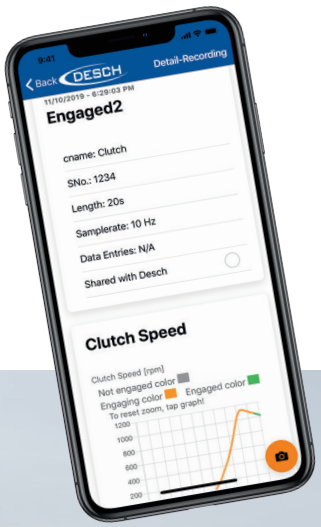

SMART DRIVE SOLUTIONS

CONTACT

DESCH Canada Ltd.
240 Shearson Crescent
Cambridge
Ontario
Canada N1T 1J6
T +1800 2631866
+1519 6214560
F +1519 6231169
desch.canada@desch.com

DESCH USA LP
Manufacturing,
Assembly
4940 Merrifield Pkwy
Dallas, Texas
75236
T +1 330 937 9030
F +1 330 937 9031
desch.dallas@desch.com

DESCH USA LP
Sales, Engineering,
Service Support
3700 Embassy Pkwy,
Suite 530 Akron Ohio
44333
T +1 330 937 9030
F +1 330 937 9031
sales.usa@desch.com

Technical changes reserved · © DESCH North America GmbH & Co. KG ·