SMART DRIVE SOLUTIONS

THE OPTIMUM SERVO DRIVE WITH DESCH PLANETARY GEARBOXES

FS 22· GB

The right drive for every servo press

The right torque converter is required to leverage the full potential of the servo motor and to generate the torque needed for the metal forming process. DESCH offers a wide range of drive concepts with planetary gearboxes with the requisite ratios and torque ratings. This gives rise to the optimum mechanical and electrical drive configuration.

For large quantities for small to medium press forces:

Servox® E
Torque range from 2 kNm to 300 kNm
Gear ratios 3,5 - 10

The Servox® E standard drive is equipped with a hydraulically released safety brake on the gear input shaft. The planetary gearbox in tried-and-tested DESCH quality follows in direction of the eccentric shaft.

Standard gearboxes are available with a ratio of 4 to 6 and cover a torque range from 10 to 300 kNm. Servo motors with a torque range of 1.7 to 40 kNm are used as the drive. These compact drives offer press manufacturers an extremely simple installation option for the entire servo drive train. What's more, a separate safety brake does not have to be installed on the opposite end of the eccentric shaft. For many existing press stand designs, it is beneficial that the connecting dimensions for an existing flywheel drive match the connections of standard Servox® E gearboxes so they can be exchanged without having to make any changes to the machine frame. This means that the new drive technology can also be adapted to suit older machines. Standard Servox® E drives are also ideal for applications where an existing gear stage is to be driven in the press head.

For higher press forces or fast servo motors

If a smaller servo motor is required, which runs with high speed and the speed of the eccentric shaft is rather low, medium and high gear ratio should be use.

DESCH offers three different solutions with medium and large gear ratios.

Servox® SP
Torque range from 10 kNm to 150 kNm
Gear ratios 12 - 20

Servox® Z
Torque range from 10 kNm to 3.000 kNm
Gear ratios 12 - 100

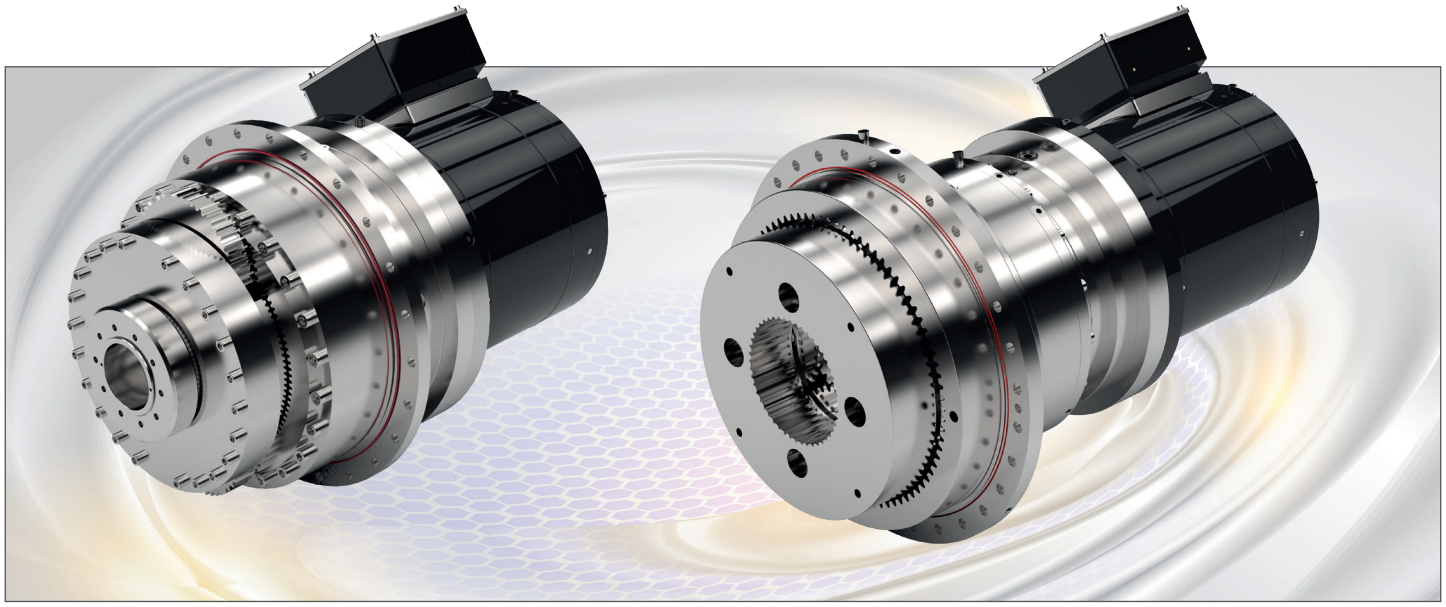

Servox® SP drive has a modified planetary gearbox and enables medium gear ratios of between 12 and 20 in coaxial arrangement. The drive is only a little bit longer than a standard planetary gearbox with a similar output. These drives can be designed cost-effectively up to torque ratings of 150 kNm. Due the higher gear ratio the press manufacturer has a cost advantage with a smaller servomotor and a cheaper control and regulation system.

A two-stage Servox® Z drive is available for even higher ratios and a coaxial design. Based on the standard Servox® E drive, a second planetary gear is flange-mounted on the output of the first gear stage, enabling maximum torque ratings of up to 3.000 kNm and a gear ratio up to i = 100. The desired output speed and the torque and speed of the available servo motors are key. According to the available and required input and output speed and torque of the servo motor and application.

Flexible solution for high torques

Our Servox® family like the Servox® DS (for two motors) the Servox® TS (for three motors) the Servox® QS (for 4 motors) and Servox® PS (for 5 motors) offer the greatest flexibility in terms of output torque, gear ratio and motor variations. In this case, the output torque is transmitted via planetary gearing. Between two and five servo motors can produce the drive on the input side. This adapting side can be modified to all commercially available servo motors in the market.
Flexible combination of the gear ratio and the number of motors gives rise to a broad range of applications, providing customers with the drive solution best suited to their requirements. The gear ratios range from 4 to around 50.

Servox® for multi-motor drives
Torque range from 100 kNm to 3.000 kNm
Gear ratios 4 - 50

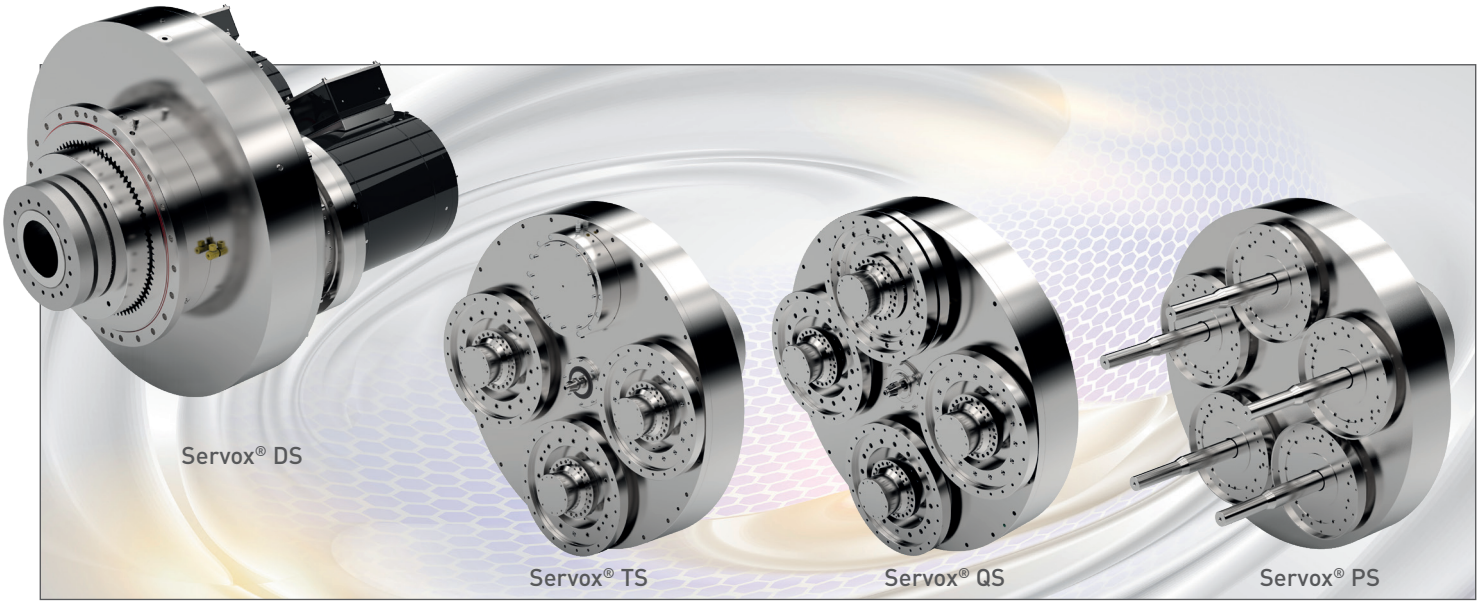

Benefits:

- Low moments of inertia => shortens cycle times and increases productivity.
- A high power density makes for compact dimensions with high torque ratings, which in turn facilitates installation in both new and existing machinery.
- Broad range of experience in the construction of drives for cutting and forming tools, particularly in the area of press drive technology. DESCH is an innovative manufacturer who solves your drive problems with sound design, production and testing expertise.
- No additional safety brake necessary
- Same connection dimensions for ratio 4 and 6
- Robustness and a long service life contribute to high machine availability.
- Precise manufacturing gives rise to smooth and quiet running, high efficiency and, therefore, lower energy consumption.
- Suitable for pendelum stroke applications
- Over 60 years experience in constructing planetary gears and brakes.

DESCH Servox® planetary gearbox

Type E with integrated safety brake

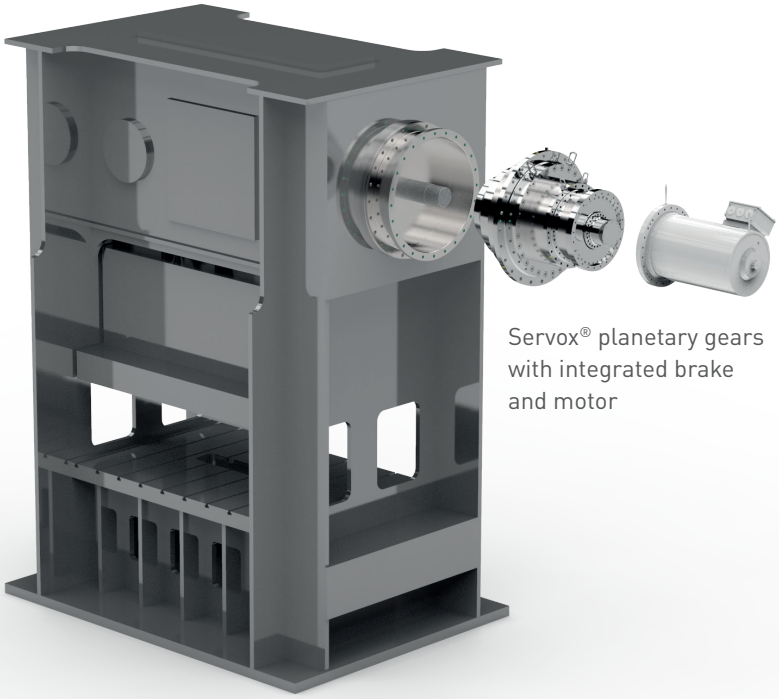

Servox® planetary gears with integrated brake and motor

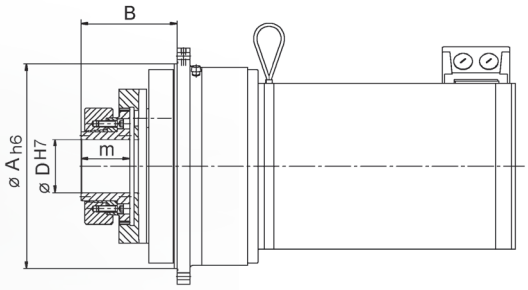

Size	10	16	25	40	63	100	160	250
Output torque Nm	10 000	16 000	25 000	40 000	63 000	100 000	160 000	250 000
Ratio i	3.86 5.88	3.86 5.88	3.86 5.88	3.86 5.88	3.86 5.88	3.86 5.88	3.86 5.88	3.86 5.88
A h6 mm	340	430	510	580	650	730	820	1050
B mm	172	165	200	242	305	345	382	495
D H7 mm	85	120	130	150	170	190	220	260

Picture shows only an excerpt, other variants on request

Other products for press drives

Servox®-M	Servox planetary gear box for ratios smaller than i < 3,5
Servox®-SG	Servox summing gear assembly without planetary reduction
ECO-Servox®	Economic Servox drive execution
Servox®-Brake	Servox WRB wet running brake
Lutex® LKB	Pneumatically actuated clutch/brake combination with high torque at small dimensions
Lutex® HKB, HKBT	Hydraulically actuated clutch/brake combination: separate clutch - separate brake
DESCH Complete Press Drive KA	Complete press drives. (either hydraulically or pneumatically operated) together with planetary gearbox and flywheel
Further components	Quick exhaust module, crankshafts, flywheels, pulleys, hydraulic power units and accessories

Customised solutions on request!

SMART DRIVE SOLUTIONS

CONTACT

DESCH Canada Ltd.
240 Shearson Crescent
Cambridge
Ontario
Canada N1T 1J6
T +1800 2631866
+1519 6214560
F +1519 6231169
desch.canada@desch.com

DESCH USA LP
Manufacturing,
Assembly
4940 Merrifield Pkwy
Dallas, Texas
75236
T +1 330 937 9030
F +1 330 937 9031
desch.dallas@desch.com

DESCH USA LP
Sales, Engineering,
Service Support
3700 Embassy Pkwy,
Suite 530 Akron Ohio
44333
T +1 330 937 9030
F +1 330 937 9031
sales.usa@desch.com

Technical changes reserved · © DESCH North America GmbH & Co. KG ·