SMART DRIVE SOLUTIONS

DESCH Planox® - PP

Clutches pneumatically actuated

Planox® friction clutches

Fig. 1

Type PPF

DESCH Planox®-clutches are dry running, hydraulically or pneumatically actuated friction clutches. These clutches permit rapid acceleration of the driven machines or machinery groups as well as reliable torque transmission.

Machines connected with friction clutches are protected against damage which can occur through peak torques during operation or during the engaging/disengaging process. The toothed ring must always be fitted at the input side of the clutch.

Pneumatically actuated

With the pneumatically actuated Planox®-clutch, type PP, the compressed air is passed through a central bore in the shaft via a rotor connection into the ring cylinder and it controls the torque. The engaging section, consisting of the cylinder and piston, is sealed with O-rings or lip seals. Simple, maintenance-free and sturdy design are just some of its benefits. This design has proved highly successful in power transmission applications with a high engaging/disengaging frequency. The wear which occurs is offset via the piston path. The design PPR has a further advantage in addition to the known benefits of the pneumatically actuated version type PP. The compressed air is passed from outside into the cylinder in radial direction which means that it is possible to use pneumatically actuated clutches, for example, with long shafts. The engaging section, comprising of cylinder and piston, runs in angular-contact ball bearings through which the required contact forces are transmitted. The torque resulting from the friction of the angular-contact ball bearing is absorbed by a torque support fixed to the foundation or farm of the machine. The clutch can be used up to an air pressure of about 8 bar. The transmitted torque is roughly proportional to the air pressure. Documentation about friction clutches type PT on request.

The execution RA allows for an easy radial exchange of the friction discs without removing the in- or output components. The Planox® friction clutch with bell housing and outer bearing has been developed to be fitted to diesel engines. It is available as mechanically, pneumatically or hydraulically actuated clutch. The complete clutch including bearings is accommodated in a bell housing which forms a unit with the engine after being installed. This design is a technical and economic success. The powerfully dimensioned bearings of the output shaft in the clutch housing permit power take-off via flexible couplings or pulleys. The admissible radial loads on the output shaft end are shown as a function of speed in the table on page 10.

The flywheel and flywheel housing connections comply with the American SAE standards J 617 and J 621. The connecting dimensions of the flywheel meet the American standard J 620d and the VDMA standard sheet 24 380. We have adapted the connecting dimensions of our clutches and bell housings to these standards.

Assuming the SAE standards are observed on the engines, the Planox®-clutches can be mounted without the use of spacer rings. The clutch sizes for diesel engines were selected in collabortation with the engine manufacturers.

In the event of frequent engaging/disengaging or large masses to be accelerated a check of the thermal loading of the clutch must be made.

Parts of the Planox® friction clutches

Type PPW
Planox® pneumatically
engageable shaft to shaft connection

Type PPRF
Planox® pneumatically engageable with
radial air supply flange to shaft connection

Type PPF
Planox® pneumatically engage-
able flange to shaft connection

Type PPA
Planox® pneumatically engageable
with outer bearing

Type PPRW
Planox® pneumatically engageable
with radiale air supply to shaft

Combinations
special documentation
on request

Type PPW and PPF

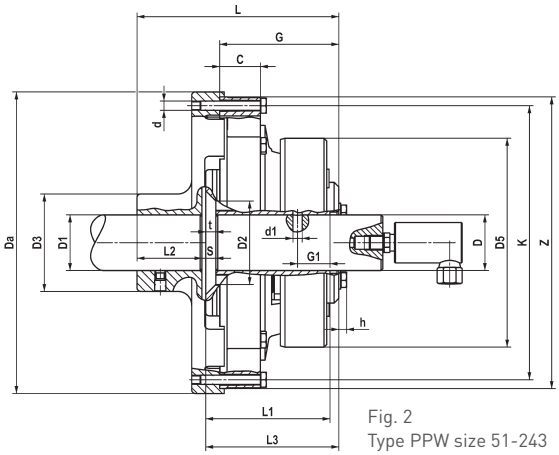

Fig. 2
Type PPW size 51-243

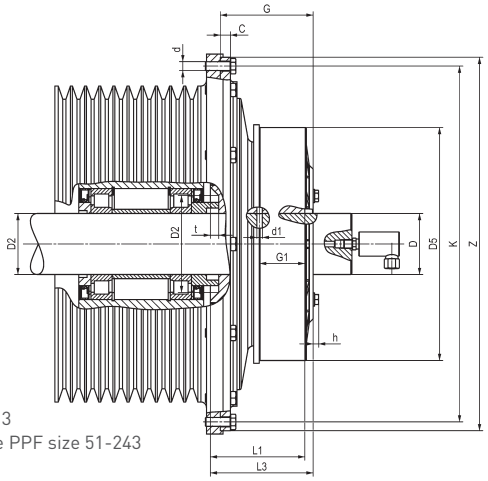

Fig. 3
Type PPF size 51-243

Dimensions in mm • can be delivered ex stock

Size	Torque [1] $T_ü$ at 5 bar Nm	Torque [1] $T_ü$ at 7 bar Nm	Max. speed[4] PPW rpm	Max. speed[4] PPF rpm	Volume of cylinder with new friction discs dm³	Volume of cylinder with worn friction discs dm³	A[5]	C	Dᵃ	D and D_1 pilot bore	D[3] max.	D_1[3] max.	D_2	D_3	D_5	d Quantity of bolts x Ø
•51	130	190	3500	3500	0,023	0,059	44	13	170	14	28	28	-	55	125	6 x M6
•61	270	390	3500	3500	0,047	0,11	55	15	225	18	34	34	50	65	150	6 x M8
•71	340	490	3350	3350	0,064	0,13	62,5	16	250	18	45	45	65	80	168	8 x M8
•81	460	660	3000	3200	0,078	0,16	65	16	275	18	45	45	65	80	178	6 x M10
•101	920	1320	2500	3000	0,14	0,29	80	20	325	28	60	60	90	105	225	8 x M10
•102	1850	2700	2500	3000	0,14	0,44	80	44	325	28	60	60	90	105	225	8 x M10
•111	1000	1450	2200	2850	0,14	0,29	80	20	365	28	60	60	90	105	225	8 x M10
•112	2000	3000	2200	2850	0,14	0,44	80	44	365	28	60	60	90	105	225	8 x M10
141	1600	2350	1700	2500	0,32	0,52	100	12	480	48	90	90	125	155	264	8 x M12
•142	3200	4600	1700	2500	0,32	0,72	100	12	480	48	90	90	125	155	264	8 x M12
•143	4400	6600	1700	2500	0,32	0,92	100	12	480	48	90	90	125	155	264	8 x M12
161	3100	4500	1550	2200	0,52	0,9	135	16	530	58	110	100	130	170	340	8 x M12
162	6000	8800	1550	2200	0,52	1,3	135	16	530	58	110	100	130	170	340	8 x M12
163	9200	13500	1550	2200	0,52	1,7	135	16	530	58	110	100	130	170	340	8 x M12
181	3600	5200	1400	1960	0,56	0,96	140	16	585	68	125	110	150	185	360	6 x M16
182	6900	10200	1400	1960	0,56	1,4	140	16	585	68	125	110	150	185	360	6 x M16
183	10600	15500	1400	1960	0,56	1,8	140	16	585	68	125	110	150	185	360	6 x M16
211	5300	8050	1200	1600	0,71	1,4	170	18	685	73	150	130	175	220	430	12 x M16
212	11400	16900	1200	1600	0,71	2,2	170	18	685	73	150	130	175	220	430	12 x M16
213	17200	25300	1200	1600	0,71	2,9	170	18	685	73	150	130	175	220	430	12 x M16
241	7300	10900	1100	1200	0,84	1,7	180	18	745	88	180	140	210	235	470	12 x M20
242	15500	22700	1100	1200	0,84	2,6	180	18	745	88	180	140	210	235	470	12 x M20
243	23300	34100	1100	1200	0,84	3,4	180	18	745	88	180	140	210	235	470	12 x M20
271	18800	26900	1000	1250	0,74	2,8	215	47	810	-	180	180	-	340	610	12 x M20
272	36700	52900	1000	1250	1,3	5,3	215	109	810	-	180	180	-	340	610	12 x M20
273	56500	80700	1000	1250	1,8	7,9	215	171	810	-	180	180	-	340	610	12 x M20

1) The torque changes with increased air pressure:
multiply torque values by 1,2 (at 6 bar) resp. 1,6 (at 8 bar).

2) Outside centering Z:
ISO j 7 on size 51-143;
ISO js 7 on size 161-243;
ISO k 6 on size 271-273

3) Bores: inner part D = ISO H7, recommendation for shaft = ISO m 6;
flanged hub D1 = ISO H7; 1 set screw displaced by 180 degrees against keyway, keyways according to DIN 6885, page 1. Bore d1 for air supply through the hub displaced by 180 degrees against keyway.

4) Speeds are valid if flanged hub is made of grey cast iron EN-GJS. Higher speeds are allowed only if flanged hub is made of spherodial graphite iron EN-GJS (max. speed see type PPF)

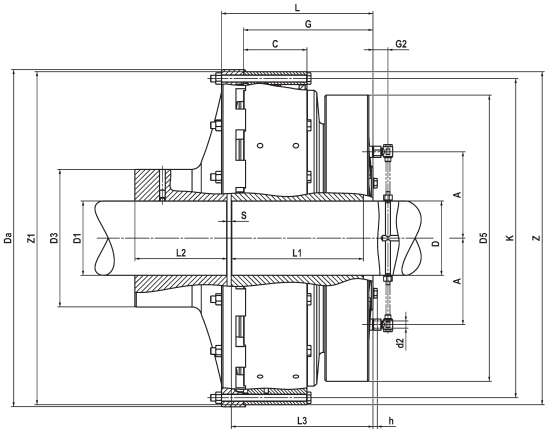

Fig. 4
Type PPW and PPF size 271-273

Dimensions in mm • can be delivered ex stock

Size	d_1 3)	d_2 5)	G	G_1	G_2	h	K	L	L_1	L_2	L_3	s	t	Z2)	Z_1 H7	Mass in kg PPW	Mass in kg PPF
•51	9	M 10 x 1	57	38	-	4	153	102	60	35	65	2	6	165	-	4,9	3,1
•61	9	M 10 x 1	71	48	-	4	200,02	121	73	40	79	8	6	215,9	-	8,7	5,2
•71	9	M 10 x 1	75	48	-	5,5	222,25	140	76	55	83	8	6	241,3	-	12,0	7,3
•81	9	M 10 x 1	75	48	-	5,5	244,48	140	76	55	83	8	6	263,52	-	14,5	8,9
•101	9	M 12 x 1,5	105	70	-	7	295,28	194	110	70	120	15	11	314,32	-	29,1	18,4
•102	9	M 12 x 1,5	129	70	-	7	295,28	218	134	70	144	15	11	314,32	-	35,4	24,6
•111	9	M 12 x 1,5	105	70	-	7	333,38	194	110	70	120	15	11	352,42	-	34,0	21,2
•112	9	M 12 x 1,5	129	70	-	7	333,38	218	134	70	144	15	11	352,42	-	41,5	28,6
141	9	M 12 x 1,5	111	75	-	7	438,15	240	116	110	126	15	11	466,72	-	65	37,2
•142	9	M 12 x 1,5	135	75	-	7	438,15	264	140	110	150	15	11	466,72	-	79	51
•143	9	M 12 x 1,5	159	75	-	7	438,15	288	164	110	174	15	11	466,72	-	94	66
161	12	M 14 x 1,5	137	92	-	8	488,92	276	140	120	152	15	11	517,52	-	102	62
162	12	M 14 x 1,5	167	92	-	8	488,92	306	170	120	182	15	11	517,52	-	124	84
163	12	M 14 x 1,5	197	92	-	8	488,92	336	200	120	212	15	11	517,52	-	145	105
181	12	M 14 x 1,5	137	95	-	8	542,92	288	140	130	152	17	11	571,5	-	129	74
182	12	M 14 x 1,5	167	95	-	8	542,92	318	170	130	182	17	11	571,5	-	156	101
183	12	M 14 x 1,5	197	95	-	8	542,92	348	200	130	212	17	11	571,5	-	182	128
211	12	M 14 x 1,5	167	110	-	8	641,35	348	170	155	185	23	15	673,1	-	210	125
212	12	M 14 x 1,5	203	110	-	8	641,35	384	206	155	221	23	15	673,1	-	256	171
213	12	M 14 x 1,5	239	110	-	8	641,35	420	242	155	257	23	15	673,1	-	298	213
241	12	M 14 x 1,5	172	115	-	8	692,15	368	170	170	190	23	15	733,42	-	258	153
242	12	M 14 x 1,5	208	115	-	8	692,15	404	206	170	226	23	15	733,42	-	311	207
243	12	M 14 x 1,5	244	115	-	8	692,15	440	242	170	262	23	15	733,42	-	365	261
271	-	M 22 x 1,5	186	-	23	10	760	401	191	180	211	10	-	800	735	508	329
272	-	M 22 x 1,5	251	-	23	10	760	466	256	180	276	10	-	800	735	649	468
273	-	M 22 x 1,5	316	-	23	10	760	531	321	180	341	10	-	800	735	789	606

5) Air supply for size 51-243 into the cylinder via d1 (see fig. 2 + 3), via d2 on request (see fig. 4). Scew connection for this are not supplied.

Masses are valid on max. bore.

Clutches with torque up to 700.000 Nm are available on request.

Type PPRW and PPRF

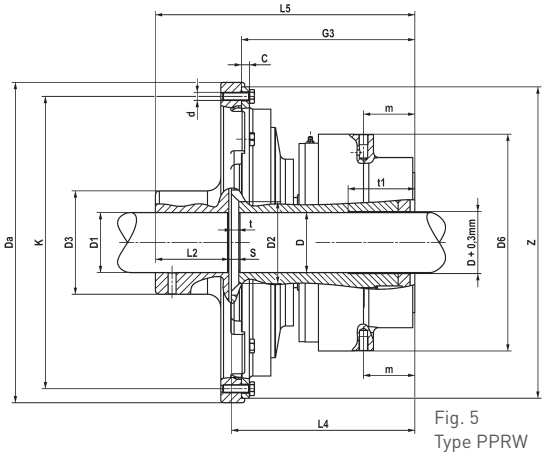

Fig. 5
Type PPRW

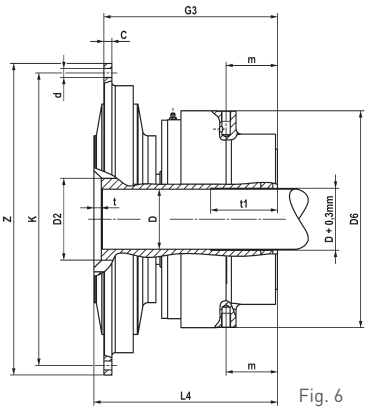

Fig. 6
Type PPRF

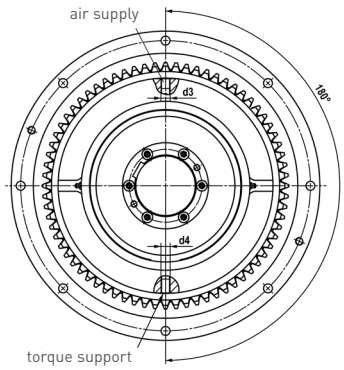

Dimensions in mm • can be delivered ex stock

Size	Torque[1] $T_{ü}$ at 5 bar Nm	at 7 bar Nm	Max. speed[4] PPRW rpm	PPRF rpm	Volumen of cylinder with new friction discs dm³	with worn friction discs dm³	C	D_a	D and D_1 pilot bore	D[3] max.	D_1[3] max.	D_3	D_6	d Quantity of bolts x Ø
•51	180	260	3500	3500	0,023	0,059	13	170	14	28	28	55	140	6 x M6
•61	270	390	3500	3500	0,047	0,11	15	225	18	34	34	65	160	6 x M8
•71	290	430	3350	3350	0,064	0,13	16	250	18	45	45	80	180	8 x M8
•81	450	650	3000	3200	0,078	0,16	16	275	18	45	45	80	180	6 x M10
•101	920	1300	2500	3000	0,14	0,29	20	325	28	60	60	105	230	8 x M10
•102	1850	2700	2500	3000	0,14	0,44	44	325	28	60	60	105	230	8 x M10
•111	1000	1450	2200	2850	0,14	0,29	20	365	28	60	60	105	230	8 x M10
•112	2000	2950	2200	2850	0,14	0,44	44	365	28	60	60	105	230	8 x M10
141	1700	2450	1700	2375	0,32	0,52	12	480	48	90	90	155	325	8 x M12
•142	3350	4850	1700	2375	0,32	0,72	12	480	48	90	90	155	325	8 x M12
•143	4700	6900	1700	2375	0,32	0,92	12	480	48	90	90	155	325	8 x M12
161	2400	3500	1550	2000	0,52	0,9	16	530	58	110	100	170	368	8 x M12
162	4550	6800	1550	2000	0,52	1,3	16	530	58	110	100	170	368	8 x M12
163	7100	10500	1550	2000	0,52	1,7	16	530	58	110	100	170	368	8 x M12
181	3900	5600	1400	1750	0,56	0,96	16	585	68	125	110	185	400	6 x M16
182	7500	11000	1400	1750	0,56	1,4	16	585	68	125	110	185	400	6 x M16
183	11500	16750	1400	1750	0,56	1,8	16	585	68	125	110	185	400	6 x M16
211	6000	8900	1200	1500	0,71	1,4	18	685	73	150	130	220	460	12 x M16
212	12700	18650	1200	1500	0,71	2,2	18	685	73	150	130	220	460	12 x M16
213	19100	28000	1200	1500	0,71	2,9	18	685	73	150	130	220	460	12 x M16
241	9600	14900	1100	1200	0,84	1,7	18	745	88	180	140	235	535	12 x M20
242	20100	29100	1100	1200	0,84	2,6	18	745	88	180	140	235	535	12 x M20
243	30200	43700	1100	1200	0,84	3,4	18	745	88	180	140	235	535	12 x M20

Size	d_3	d_4	G_3	K	L_2	L_4	L_5	m	S	t	t_1	Z[2]	Mass in kg PPRW	Mass in kg PPRF
•51	M 14 x 1,5	M 14	122	153	35	130	167	40	2	6	65	165	8,5	6,7
•61	M 14 x 1,5	M 14	135	200,02	40	143	185	46,5	8	6	70	215,9	13,7	10,3
•71	M 14 x 1,5	M 14	139	222,25	55	147	204	47	8	6	55	241,3	18,0	13,4
•81	M 14 x 1,5	M 14	139	244,48	55	147	204	47	8	6	55	263,52	20,6	15,1
•101	M 14 x 1,5	M 14	186	295,28	70	201	275	59	15	11	70	314,32	43,7	32,9
•102	M 14 x 1,5	M 14	210	295,28	70	225	299	59	15	11	70	314,32	49,9	39,1
•111	M 14 x 1,5	M 14	186	333,38	70	201	275	59	15	11	70	352,42	48,8	36,0
•112	M 14 x 1,5	M 14	210	333,38	70	225	299	59	15	11	70	352,42	56	43,4
141	M 14 x 1,5	M 14	236	438,15	110	251	365	77	15	11	100	466,72	108	80
•142	M 14 x 1,5	M 14	260	438,15	110	275	389	77	15	11	100	466,72	122	94
•143	M 14 x 1,5	M 14	284	438,15	110	299	413	77	15	11	100	466,72	136	108
161	M 14 x 1,5	M 20	260	488,92	120	275	399	84	15	11	100	517,52	160	120
162	M 14 x 1,5	M 20	290	488,92	120	305	429	84	15	11	100	517,52	181	142
163	M 14 x 1,5	M 20	320	488,92	120	335	459	84	15	11	100	517,52	203	163
181	M 14 x 1,5	M 20	268	542,92	130	283	419	92	17	11	100	571,5	232	177
182	M 14 x 1,5	M 20	298	542,92	130	313	449	92	17	11	100	571,5	259	204
183	M 14 x 1,5	M 20	328	542,92	130	343	479	92	17	11	100	571,5	285	231
211	M 22 x 1,5	M 24	353	641,35	155	371	534	120	23	15	130	673,1	380	294
212	M 22 x 1,5	M 24	389	641,35	155	407	570	120	23	15	130	673,1	423	338
213	M 22 x 1,5	M 24	425	641,35	155	443	606	120	23	15	130	673,1	468	382
241	M 22 x 1,5	M 24	380	692,15	170	398	576	135	23	15	150	733,42	536	432
242	M 22 x 1,5	M 24	416	692,15	170	434	612	135	23	15	150	733,42	590	485
243	M 22 x 1,5	M 24	452	692,15	170	470	648	135	23	15	150	733,42	643	439

Weights are valid on max. bore. **Adapter:** M14x1,5 to G ¼ - Mat.-No. 1014501 M14x1,5 to G ⅜ - Mat.-No. 1014502 M22x1,5 to G ½ -Mat.-No.1014503

Calculated life time of the bearings of type PPR

Apart from following selection of clutch it is necessary to check the bearings. The values shown in the margin refer to a life time of the angular contact ball bearing of 10.000 hours.

At 5000 operating hours the applicable air pressure has to be multiplied with 1,25, at 15000h operating hours with 0,87.

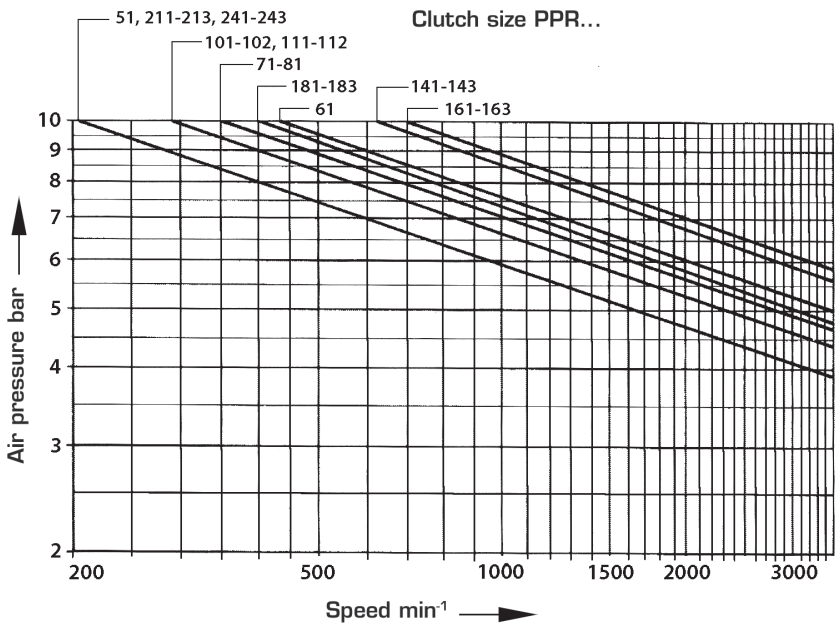

Example of use for Planox® clutches

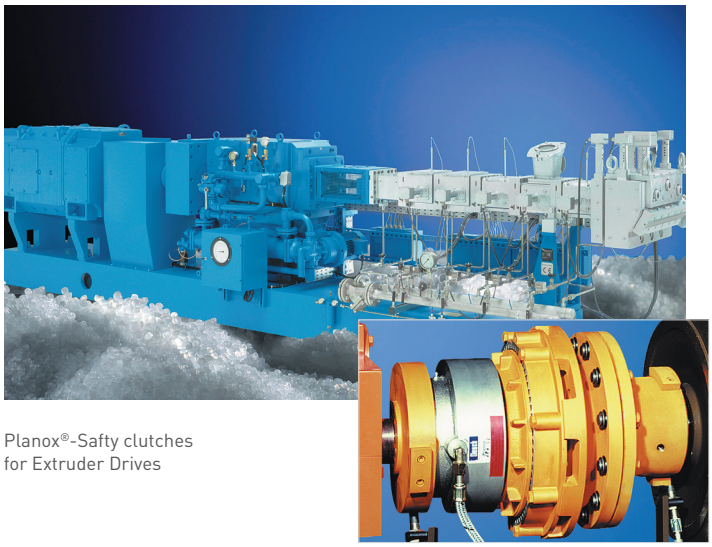

Planox®-Safty clutches
for Extruder Drives

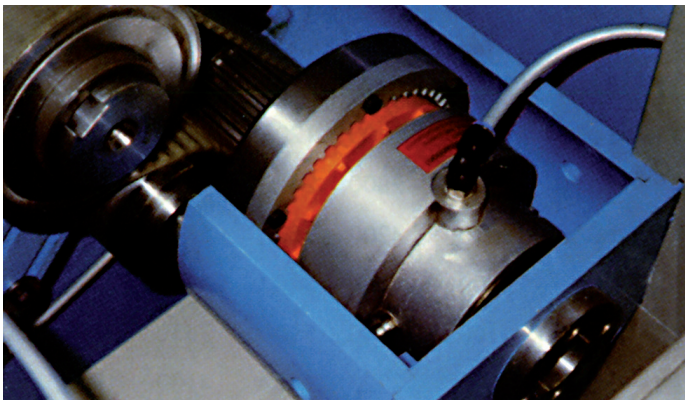

Planox®- Clutches in the cutter drive of cardboard machines

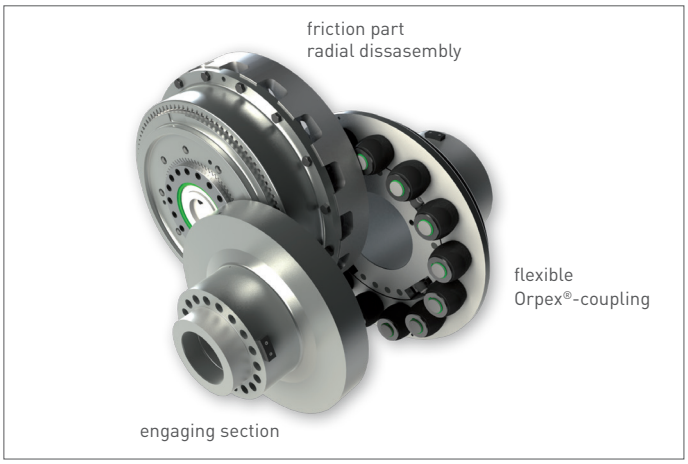

Type PPF-RA-Orpex®

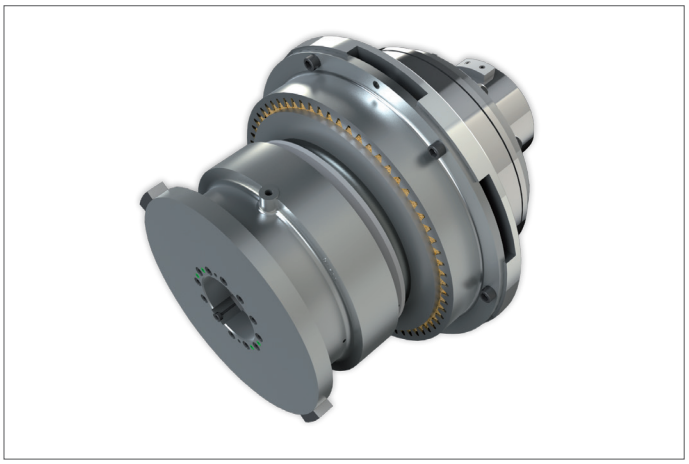

Type PPRF-Orpex®

Type PPA and PPRA

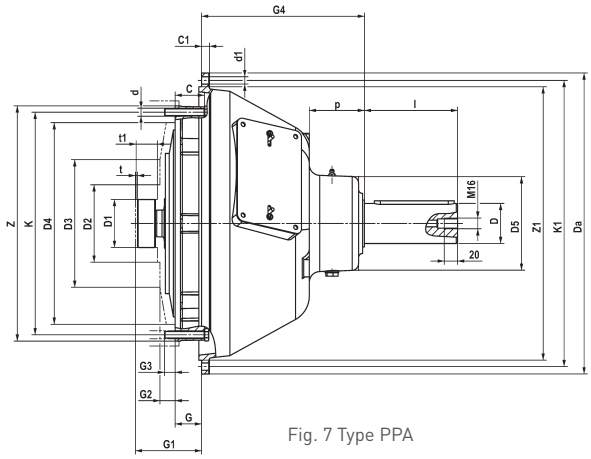

Fig. 7 Type PPA

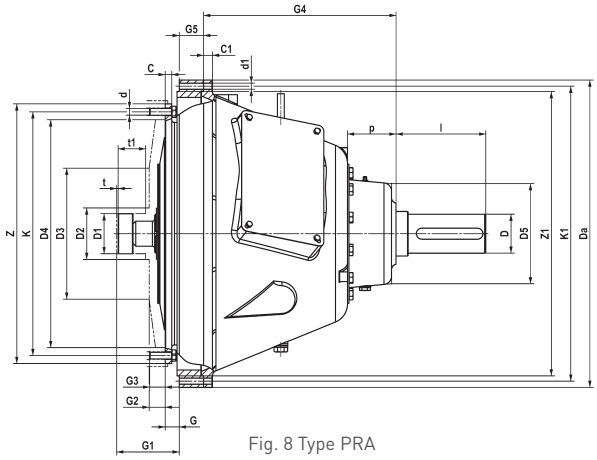

Fig. 8 Type PRA

Dimensions in mm resp. inches

Size	Bell[4] housing SAE-Size	Tourqe Tü PPA at 5 bar Nm	Tourqe Tü PPA at 7 bar Nm	Tourqe Tü PPRA at 5 bar Nm	Tourqe Tü PPRA at 7 bar Nm	max. speed PPA rpm	max. speed PPRA min^{-1}	C	C_1	D[1]	D_1[3]	D_2	D_3	D_4	D_5[1]	d Number of holes x Ø
61	-6-5-4-3	270	390	270	390	3500	3500	15	8	30	2,047 52	2 ½ 63,5	5 127	7 ¼ 184,2	105	6 x 8,5
71	-6-5-4-3	340	490	290	430	3350	3350	16	8	30	2,047 52	2 ½ 63,5	- -	8 ⅛ 206,2	105	6 x 8,5
81	-5-4-3	460	660	450	650	3200	3200	16	8	40	2,441 62	3 76,2	- -	8 ⅞ 225,6	130	6 x 10,5
101	-4-3-2-1	920	1320	920	1300	3000	3000	20	10	55	2,835 72	3 76,2	7 ¾ 196,85	10 ⅞ 276,4	130	8 x 11
111	-4-3-2-1	1000	1450	1000	1450	2850	2850	20	10	55	2,835 72	- -	8 203,2	12 ⅜ 314,32	130	8 x 11
112	-3-2-1-0	2000	3000	2000	2950	2850	2850	44	12	60	2,835 72	- -	8 203,2	12 ⅜ 314,32	140	8 x 11
141	-1-0-00	1600	2350	1700	2450	2500	2375	12	15	60	3,150 80	4 101,6	8 ¾ 222,25	16 ⅛ 409,4	155	8 x 13,5
142	-1-0-00	3200	4600	3350	4850	2500	2375	12	16	70	3,150 80	4 101,6	8 ¾ 222,25	16 ⅛ 409,4	180	8 x 13,5
143	-1-0-00	4400	6600	4700	6900	2500	2375	12	16	70	3,150 80	4 101,6	8 ¾ 222,25	16 ⅛ 409,4	180	8 x 13,5
162	-0	6000	8800	4550	6800	2200	2000	16	16	70	3,937 100	4 ⅛ 104,6	10 254	18 ⅛ 460,2	180	8 x 13,5
163	-0-00	9200	13500	7100	10500	2200	2000	16	18	80	3,937 100	4 ⅛ 104,6	10 254	18 ⅛ 460,2	190	8 x 13,5
181	-0-00	3600	5200	3900	5600	1960	1750	16	16	70	3,937 100	4 ⅛ 104,6	- -	19 ⅝ 498,3	180	6 x 18
182	-0-00	6900	10200	7500	11000	1960	1750	16	18	80	3,937 100	4 ⅛ 104,6	- -	19 ⅝ 498,3	190	6 x 18
183	-0-00	10600	15500	11500	16750	1960	1750	16	18	90	3,937 100	4 ⅛ 104,6	- -	19 ⅝ 498,3	220	6 x 18
211	-00	5300	8050	6000	8900	1600	1500	18	18	80	5,118 130	5 ¾ 146	- -	23 584,2	190	12 x 18
212	-00	11400	16900	12700	18650	1600	1500	18	18	90	5,118 130	5 ¾ 146	- -	23 584,2	220	12 x 18
241	-00	7300	10900	9600	14900	1200	1200	18	18	90	5,118 130	5 ¾ 146	- -	25 ⅜ 644,7	220	12 x 22
242	-00	15500	22700	20100	29100	1200	1200	18	18	90	5,118 130	5 ¾ 146	- -	25 ⅜ 644,7	220	12 x 22

Housing-dimensions

SAE-housing		6	5	4	3[4]	2	1	0	00
Z_1[2]	inches mm	10 ½ 266,7	12 ⅜ 314,32	14 ¼ 361,95	16 ⅛ 409,58	17 ⅝ 447,68	20 ⅛ 511,17	25 ½ 647,7	31 787,4
K_1	inches mm	11 ¼ 285,75	13 ⅛ 333,37	15 381	16 ⅞ 428,62	18 ⅜ 466,72	20 ⅞ 530,22	26 ¾ 679,45	33 ½ 850,9
D_a	inches mm	12 ⅛ 307,97	14 355,6	15 ⅞ 403,22	17 ¾ 450,85	19 ¼ 488,95	21 ¾ 552,45	28 711	34 ¾ 883
Number of holes		8	8	12	12	12	12	16	16
Hole-Ø d_1		11	11	11	11	11	11	13,5	13,5

Planox® friction clutches with external bearing

The Planox®-friction clutches type PPA and PPRA for application with Diesel Engines have been designed in close cooperation with manufactures of engines according to the horsepower ratings and SAE-sizes. Planox®-clutches are standardized for the major brands of Diesel Engines. Specifications are available on request. The dimensions of intallations are according to SAE-standards J 617, J 620 and J 621 resp. to VDMA-specification 24380.

Size	G	G_1	G_2	G_3	G_4	G_5	K	l[1]	p[1]	t	t_1	Z[2]
61	1 3/16 30,2	2 13/16 71,4	½ 12,7	⅜ 9,7	5 9/16 141,288	20	7 7/8 200,02	80	34	1/16 1,583	11/16 17,463	8 ½ 215,9
71	1 3/16 30,2	2 13/16 71,4	½ 12,7	½ 12,7	5 9/16 141,288	20	8 ¾ 222,25	80	34	1/16 1,583	11/16 17,463	9 ½ 241,3
81	2 7/16 62	3 15/16 100,1	½ 12,7	½ 12,7	7 1/16 179,388	-	9 ⅝ 244,48	110	59	1/16 1,583	¾ 19,05	10 ⅜ 263,52
101	2 ⅛ 53,8	3 15/16 100,1	⅝ 15,7	½ 12,7	8 ⅝ 219,075	30	11 ⅝ 295,28	110	78	1/16 1,583	1 ⅛ 28,58	12 ⅜ 314,32
111	1 9/16 39,6	3 15/16 100,1	1 ⅛ 28,4	⅞ 22,4	9 ¼ 234,95	35	13 ⅛ 333,38	110	94	1/16 1,583	1 ¼ 31,75	13 ⅞ 352,42
112	1 9/16 39,6	3 15/16 100,1	1 ⅛ 28,4	⅞ 22,4	9 ⅝ 244,475	35	13 ⅛ 333,38	140	84	1/16 1,583	1 ¼ 31,75	13 ⅞ 352,42
141	1 25,4	3 15/16 100,1	1 ⅛ 28,4	⅞ 22,4	12 ⅛ 307,975	75	17 ¼ 438,15	140	102	⅛ 3,175	1 ½ 38,1	18 ⅜ 466,72
142	1 25,4	3 15/16 100,1	1 ⅛ 28,4	⅞ 22,4	13 ¾ 349,25	20	17 ¼ 438,15	140	77	⅛ 3,175	1 ½ 38,1	18 ⅜ 466,72
143	1 25,4	3 15/16 100,1	1 ⅛ 28,4	⅞ 22,4	14 ½ 368,3	44	17 ¼ 438,15	140	96	⅛ 3,175	1 ½ 38,1	18 ⅜ 466,72
162	⅝ 15,7	3 15/16 100,1	1 ⅛ 28,4	⅞ 22,4	14 ¾ 374,65	60	19 ¼ 488,92	140	102	⅛ 3,175	1 ¾ 44,45	20 ⅜ 517,52
163	⅝ 15,7	3 15/16 100,1	1 ⅛ 28,4	⅞ 22,4	16 11/16 423,863	35	19 ¼ 488,92	170	76	⅛ 3,175	1 ¾ 44,45	20 ⅜ 517,52
181	⅝ 15,7	3 15/16 100,1	1 ¼ 31,8	1 ¼ 31,8	14 ¾ 374,65	40	21 ⅜ 542,92	140	102	⅛ 3,175	1 ¾ 44,45	22 ½ 571,5
182	⅝ 15,7	3 15/16 100,1	1 ¼ 31,8	1 ¼ 31,8	16 11/16 423,863	20	21 ⅜ 542,92	170	76	⅛ 3,175	1 ¾ 44,45	22 ½ 571,5
183	⅝ 15,7	3 15/16 100,1	1 ¼ 31,8	1 ¼ 31,8	18 ¼ 463,55	40	21 ⅜ 542,92	170	116	⅛ 3,175	1 ¾ 44,45	22 ½ 571,5
211	- -	3 15/16 100,1	1 ¼ 31,8	1 ¼ 31,8	16 ½ 419,1	80	25 ¼ 641,35	170	72	⅛ 3,175	2 ¼ 57,15	26 ½ 673,1
212	- -	3 15/16 100,1	1 ¼ 31,8	1 ¼ 31,8	18 457,2	120	25 ¼ 6 41,35	170	110	⅛ 3,175	2 ¼ 57,15	26 ½ 673,1
241	- -	3 15/16 100,1	1 ¼ 31,8	1 ¼ 31,8	19 ¾ 501,65	110	27 ¼ 692,15	170	154	⅛ 3,175	2 ¼ 57,15	28 ⅞ 733,42
242	- -	3 15/16 100,1	1 ¼ 31,8	1 ¼ 31,8	20 ¼ 514,35	140	27 ¼ 692,15	170	167	⅛ 3,175	2 ¼ 57,15	28 ⅞ 733,42

1) These dimensions are not according to SAE-standard, shaft dimensions according to DIN 748, shaft tolerances D: up to 50 mm = k6, above 50 mm = m6.

2) Outside centering Z:
ISO j 7 on size 61-143;
ISO js 7 on size 162-242.
Centering Z1: SAE-housing 6-2 = ISO j 7,
SAE-housing 1-00 = ISO js 7

3) The appropriate bore should have ISO J 6 as tolerance.

4) SAE-housing 3 is not available for type PPRA 112.

Weights and moments of inertia: see page 11.

Allowable radial load: see page 10

Planox® friction clutches with external bearing

Max. allowable load (N)

Size	Speed rpm	Distance X [mm] 25	50	75	100	125
61	1000	3500	3100			
61	2000	2900	2600			
61	3000	2500	2300			
61	3500	2400	2200			
71	1000	3500	3100			
71	2000	2900	2600			
71	3000	2500	2300			
71	3350	2400	2200			
81	1000	6000	5600	5100		
81	2000	4900	4500	4200		
81	3000	4300	4000	3700		
81	3200	4200	3900	3600		
101	1000	14300	11500	10400		
101	2000	12500	10500	9000		
101	3000	10500	9500	8000		
111	1000	14500	12000	11000		
111	2000	12500	11000	10000		
111	2850	10500	10000	9500		
112	1000	19000	17000	13500		
112	2000	17000	15000	12500		
112	2850	14000	13500	12000		
141	500	22500	18000	17900	17000	
141	1000	22000	16500	15500	14000	
141	2000	20500	15500	14000	12000	
141	2500	19000	15000	13000	11000	
142	500	27600	26000	24800	23600	
142	1000	26000	24000	22000	19200	
142	2000	24000	22000	20000	17500	
142	2500	22000	20000	19000	16000	
143	500	32000	26500	23900	22800	
143	1000	27000	24000	21000	18500	
143	2000	25000	22000	20000	17000	
143	2500	24000	22000	19500	16500	
162	500	30000	26500	23600	22500	21500
162	1000	26500	24000	21000	18300	17500
162	2000	24000	22000	20000	17000	14200
162	2200	23000	22000	19500	16500	13800
163	500	35000	34000	32500	31000	29000
163	1000	28000	27000	26000	25000	23000
163	1500	26500	26000	25000	24000	22000
163	2200	24000	23000	22500	21500	20000
181	500	32200	30500	27000	22500	21500
181	1000	30000	28500	25000	22000	18000
181	1500	27500	25550	24000	21000	18000
181	1960	25000	23500	22000	20000	18000
182	500	33000	32000	30500	29500	26600
182	1000	31000	30000	28000	26000	22000
182	1500	27500	26500	25500	23500	20000
182	1960	25000	24000	23000	21000	18500
183	500	48000	46000	44000	40000	37000
183	1000	41000	39500	38000	36500	34500
183	1500	37000	35500	35000	32500	31000
183	1960	34500	33000	31500	28000	27000
211	500	45000	43000	41000	39000	36000
211	1000	40000	38000	36500	35000	33500
211	1250	37500	35500	34000	32500	31500
211	1600	34500	33000	31500	30000	29000
212	500	59000	55000	54000	43000	37200
212	1000	52000	49000	48000	43000	33500
212	1250	48000	46000	45000	42000	33500
212	1600	45000	43000	42000	41000	33500
241	500	47000	46000	44000	42500	40000
241	800	42000	41000	39000	37500	36500
241	1000	39000	38000	36000	35000	34000
241	1200	37000	36000	34000	33000	32000
242	500	62000	56000	40900	39400	38100
242	800	59000	56000	37500	34300	33100
242	1000	55000	52000	37500	32100	31000
242	1200	52000	49000	37500	30300	29300

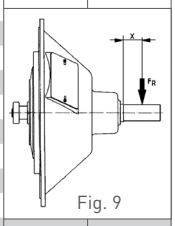

Fig. 9

These values refer to 5000 hours.
For 10.000 hours to be multiplied by 0,8; for 15.000 hours to be multiplied by 0,68.

Weights (kg)

Size	Type	with SAE housing 6	5	4	3	2	1	0	00
61	PPA	15,2	15,5	17,1	18,2	-	-	-	-
	PPRA	20,3	20,6	22,2	23,3	-	-	-	-
71	PPA	17,7	18,0	19,6	21	-	-	-	-
	PPRA	23,8	24,1	25,7	27,1	-	-	-	-
81	PPA	-	23,4	25,2	26,4	-	-	-	-
	PPRA	-	29,6	31,5	32,6	-	-	-	-
101	PPA	-	-	46,1	45,6	48,2	45,7	-	-
	PPRA	-	-	60,6	60,1	62,7	60,2	-	-
111	PPA	-	-	49	48,5	51	48,5	-	-
	PPRA	-	-	64	63	66	63	-	-
112	PPA	-	-	-	-	63	66	75	-
	PPRA	-	-	-	-	78	81	90	-
141	PPA	-	-	-	-	-	94	104	120
	PPRA	-	-	-	-	-	137	147	163
142	PPA	-	-	-	-	-	125	143	160
	PPRA	-	-	-	-	-	168	186	203
143	PPA						140	158	176
	PPRA						183	201	219
162	PPA	-	-	-	-	-	-	181	-
	PPRA	-	-	-	-	-	-	239	-
163	PPA	-	-	-	-	-	-	228	264
	PPRA	-	-	-	-	-	-	286	322
181	PPA	-	-	-	-	-	-	173	190
	PPRA	-	-	-	-	-	-	276	293
182	PPA	-	-	-	-	-	-	227	260
	PPRA	-	-	-	-	-	-	330	363
183	PPA	-	-	-	-	-	-	267	303
	PPRA	-	-	-	-	-	-	370	406
211	PPA	-	-	-	-	-	-	-	293
	PPRA	-	-	-	-	-	-	-	462
212	PPA	-	-	-	-	-	-		354
	PPRA	-	-	-	-	-	-		523
241	PPA	-	-	-	-	-	-		352
	PPRA	-	-	-	-	-	-		631
242	PPA	-	-	-	-	-	-		411
	PPRA	-	-	-	-	-	-		690

The allowable radial load FR is to be calculated with the circumferentia force FN and the factor A according to the following formula:

$$F_R = F_N \cdot A$$

$$F_N = \frac{P \cdot 9550}{n \cdot r} \text{ [N]}$$

Kind of drive:	=	Factor A
Open flat belt drive	=	4
Drive with tension pulley	=	2,5
V-belt drive	=	2,5
Gear or chain drive	=	1,25
Radius of V-belt pulley or chain drive in m	=	r

Selection of clutch size

Directions for selection

Definitions and calculations are according to VDI-regulations 2241, page 1 for externally operated clutches and brakes.

For vibrational calculations we refer to DIN 740. Further more we can offer to carry out torsional vibration simulations of the components upon special request.

Other materials can be supplied for classification and for higher speeds.

The symbols have following meaning:

n = Nominal speed [rpm]

P = Drive capacity [kW]

S = Safety factor

$T_ü$ = Static clutch torque [Nm]

As a general principle the design of a clutch should be orientated to the maximum load. This can be constituted either by the amount of torque to be transmitted, the amount of frictional heat generated by a high engagenment frequency, or by large inertal masses to be accelerated.

The size of the clutch must be considered with great care to enable its performance to meet the drive requirements. The operating conditions and performance data must be known in order to select the correct size and type of clutch unit.

The most important points are as follows:

1. Type of driving machine (Electric motor, diesel engine, ect.)

2. Capacity P [kW]

3. Nominal speed and engagement speed n [rpm]

4. Type of driven machine

5. Highest torque load during engagement T_L [Nm]

6. Moment of inertai J_L referred to the clutch output shaft [kgm²]

7. Number of clutch engagements per hour S_h [1/h]

8. Engagement time t_s [s]

9. Ambient temperature [°C]

10. Type of clutch control required

Selection of clutch size

Selection of clutch size according to mechanical load

The torque values $T_ü$ = static torque of clutch in Nm are listed in the tables.

The torque values stated can be transmitted under constant load. However, in the event of varying load conditions the corresponding operating factors „S“ must be taken into consideration: These can be found in the tables.

Peak torques can occur during engagement or operation dependent on the types of machines being coupled. The clutch size should always be orientated to the maximum load.

The required, static clutch torque is calculated with drive capacity (P) and nominal speed (n) in consideration of the safety factor „S“.

$$T_ü = \frac{P}{n} \cdot 9550 \cdot S \text{ (Nm)}$$

Selection of clutch size according to mechanical load and friction work

Besides ensuring optimum torque transmission the friction clutch must also be able to withstand the heat generated during the engagement process.

It is known that 50% of the work required for acceleration is converted to heat during this process. In case of machines where power is also taken by the machine during the acceleration process (i.e. the machine stars under load) then the friction work increases by the ratio of the clutch torque to the load torque.

The thermal calculation of the drive depends on a lot of different factors. We will do a thermal calculation based on your specific technical requirements as the basis for our offer to you.

Operating factors „S“			
Driving machine	Load symbol of application *		
	G	M	S
Electric motors, Turbines, Hydraulic motors	1,2	1,6	1,8
Piston engines 4 – 6 cylinders	2,0	2,5	2,8
Piston engines 1 – 3 cylinders	2,2	2,8	3,2
Reference values of service faktor „S“			

* Selection page 13

Safety factors „S“

Assignment of load characteristics according to type of working machine					
	Dredgers		**RUBBER MACHINERY**		**PUMPS**
S	Bucket conveyor	S	Extruders	S	Piston pumps
S	Landing gear (caterpillar)	M	Calenders	G	Centrifugal pumps (light liquids)
M	Landing gear (rail)	S	Kneading mill	M	Centrifugal pumps (viscous liquids)
M	Manoeuvring winches	M	Mixers	S	Plunger pumps
M	Pumps	S	Rolling mills	S	Press pumps
S	Impellers		**WOOD WORKING MACHINES**		**STONE AND CLAY WORKING MACHINES**
S	Cutter heads	S	Barkers	S	Crusher
M	Slewing gear	M	Planing machines	S	Rotary ovens
	GENERATORS, TRANSFORMERS	G	Wood working machines	S	Hammer mills
M	Frequency transformers	S	Saw frames	S	Ball mills
M	Generators		**CRANES**	S	Tube mills
M	Welding generators	G	Luffing gear block	S	Beater mills
	CHEMICAL INDUSTRY	S	Travelling gear	S	Brick pressesn
M	Cooling drums	G	Hoist gear		**TEXTILE MACHINES**
M	Mixers	M	Slewing gear	M	Batchers
G	Agitators (liquid material)	M	Derricking jib gear	M	Printing and dyeing machines
M	Agitators (semi-liquid material)		**PLASIC INDUSTRY MACHINES**	M	Tanning vats
M	Drying drums	M	Extruders	M	Willows
G	Centrifuges (light)	M	Calenders	M	Looms
M	Centrifuges (heavy	M	Mixers		**COMPRESSORS**
	Oil Industry	M	Crushers	S	Piston compressors
M	Pipeline pumps		**METAL WORKING MACHINES**	M	Turbo compressors
S	Rotary drilling equipment	M	Plate bending machines		**METAL ROLLING MILLS**
	CONVEYORS	S	Plate straightening machines	S	Plate shears
M	Pit-head winches	S	Hammers	M	Manipulator for turning sheets
S	Winding engines	S	Metal planning machines	S	Ingot pushers
M	jointed-band conveyors	S	Presses	S	Ingot and slabbing-mill train
G	Belt conveyors (bulk material)	M	Shears	S	Ingot handling machinery
M	Belt conveyors (piece goods)	S	Forging presses	M	Wire drawing benches
M	Band pocket conveyors	S	Punch presses	S	Descaling machines
M	Chain conveyors	G	Countershafts, line shafts	S	Thin plate mills
M	Circular conveyors	M	Machine tools (main drives)	S	Heavy and medium plate mills
M	Load elevators	G	Machine tools (auxiliary drives)	M	Winding machines (strip and wire)
G	Bucket conveyors for flour		**FOOD INDUSTRY MACHINERY**	S	Cold rolling mills
M	Passenger lifts	G	Bottling and container filling machines	M	Chain tractor
M	Plate conveyors	M	Kneading machines	S	Billet shears
M	Screw conveyors	M	Mash tubs	M	Cooling beds
M	Ballast elevators	G	Packaging machines	M	Cross tractor
S	Inclined hoists	M	Cane crushers	M	Roller tables (light)
M	Steel belt conveyors	M	Cane cutters	S	Roller tables (heavy)
M	Drag chain conveyors	S	Cane mills	M	Roller straighteners
	BLOWERS, VENTILATORS	M	Sugar beet cutters	S	Tube welding machines
M	Rotary piston blowers	M	Sugar beet washing machines	M	Trimming shears
G	Blowers (axial/radial)		**PAPER MACHINES**	S	Cropping shears
M	Cooling tower fans	S	Couches	S	Continuous casting plant
M	Induced draught fans	S	Glazing cylinders	M	Rollers adjustment drive
G	Turbo blowers	M	Pulper	S	Manipulators
	BUILDING MACHINERY	S	Pulp grinders		**LAUNDRIES**
S	Hoists	M	Calenders	M	Tumblers
G	Concrete mixers	S	Wet presses	M	Washing machines
S	Road construction machinery	S	Willows		**WATER TREATMENT**
		S	Suction presses	M	Aerators
		S	Suction rolls	M	Screw pumps
		S	Drying cylinders		

Mode of operatings

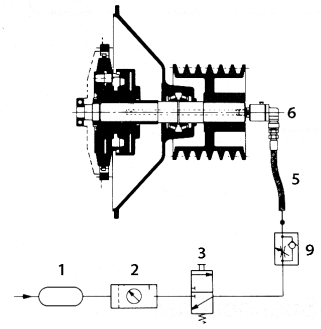

Fig. 10 Pneumatic actuation of a Planox®-clutch, type PP, with manual operation and reduced air flow.

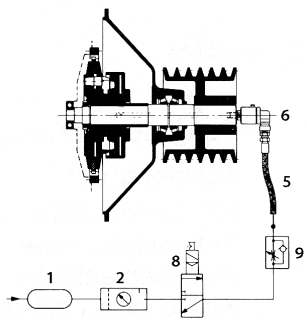

Fig. 11 Pneumatic actuation of a Planox®-clutch, type PP, with electro-magnetic operation and reduced air flow.

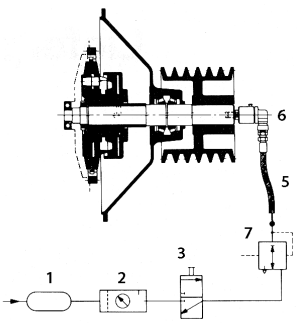

Fig. 12 Pneumatic actuation of a Planox®-clutch, type PP, with manual operation and without reduced air flow.

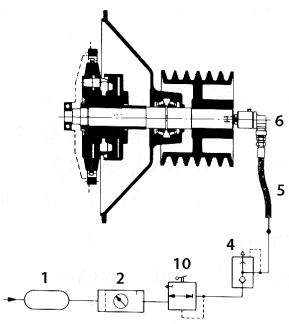

Fig. 13 Pneumatic actuation of a Planox®-clutch, type PP, for variable torque during engagement

The Fig. 10-13 are only examples. Operating devices according to the operating conditions are available on request.

Designation of the pneumatic elements

1. Compressed air chamber: Tank in which the compressed air is stored up to a maximum pressure.
2. Maintenance unit: The maintenance unit represents a combination of filter pressure reducing valve and oiler.
3. 3-way valve: The 3-way valve regulates air intake and outlet in the conduit control.
4. Quick acting release valve: Air can be rapidly released from long pipes including clutch by means of this valve.
5. Hose connection: Should be installed, so that excessive load is not placed on the bearings in the rotary seal.
6. Rotary seal: The rotary seal serves as a link between a stationary and a rotating part in order to connect an air supply.
7. Relay valve: The valve controls the rapid air intake and outlet in pneumatic clutches.
8. 3-way magnetic valve: When the circuit is complete, the valve connects the air piping with the conduit control and regulates air outlet when the circuit is open.
9. Nonreturn-throttle valve: Reduces the flow of compressed air in one direction, while allowing the air to flow freely in the opposite direction.
10. Precision regulation valve: The precision regulating valve controls the continuous variation of the air pressure between a minimum and maximum value conditional on the particular direction.

Clutch monitoring

The FS-2/FS-2/N monitor is an impulse evaluation system. It is used primarily to monitor the slip in friction clutches, belt conveyors and other applications where rotary speed differentials have to be evaluated. For this purpose the monitor records the speed-proportional impulse sequences on the drive and take-off sides at two separate input points, it passes them onto two internal meters and continuously monitors the difference between the two values shown on the meters. The measure for slip is the rotary speed differential arising between the drive and take-off sides with blocking or overload. From the rotary speed differential the monitor determines the number of differential impulses and compares them with the limit values/switching points set. The monitor switches if the number of differential impulses is reached within the reset time set.

The FS-2/FS-2/N monitor is only of single-channel structure. By making an electrical connection between the outputs of two or more units with the aim of creating a redundant switching structure, these units can also be used to perform safety-related functions. The relevant technical standards must be adhered to.

Mode of functioning

To ensure that multiple non-critical slips over an extended period do not lead to an accumulation of differential impulses which lead to a limit value/switching point, they are reset regularly by the adjustable reset time. Only with a critical slip or blocking will the permitted number of differential impulses be exceeded within the reset time and the monitor switched.

Differential impulses arise through:
- blocking = maximum rotary speed differential in a few ms
- overload = small rotary speed differential over an extended period

The length of the reset time also depends on the permitted rotary speed differential and the clutch's data.
The basic principle is:
The sensitivity of the monitoring system is greater if the reset time is extended with the same number of differential impulses.

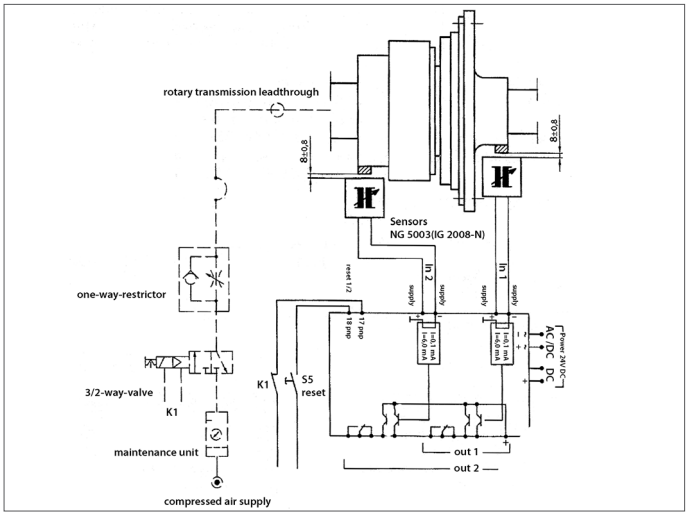

Questionnaire for pneumatic Planox® clutches

Inquiry No. _____ dated _____
Company _____
Road _____
Location _____
Requirements _____ pieces/ordes

Offer no. _____ dated _____
DESCH Antriebstechnik GmbH & Co. KG
Postbox 1440
59753 Arnsberg / Germany
Processed by: _____

A. Application
1) Type of application _____
2) Ambient conditions (temperature, humidity, polution etc.)
_____
_____
_____
3) Special requirements (ATEX, approval acc. to DIN EN 10204 etc.)
_____
_____
_____

B. Driving machine (Prime Mover)
1) Type of driving machine (e.g. electric motor, turbine or diesel engine) _____
2) Power _____ kW rotational speed _____ rpm
3) Nominal torque of the driving machine _____ Nm
4) Max. torque of the driving machine _____ Nm
(pull-out torque of the electric motor)
5) Nominal speed of driving machine _____ Nm
6) Maximum speed of driving machine _____ Nm
7) If a diesel engine is used: Make _____ Type _____ Number of cylinders _____
8) Flywheel and flywheel-housing connection (e. g. SAE data and perhaps sketch) _____

C. Driven machine (Driven machine)
1) Type of driven machine (e.g. generator, pump or compressor) _____
2) At what location is the clutch used? (e.g. main drive, slewing drive or suction pump) _____
3) Component between drive and driven machine for example belt drive, gear etc. i = _____

D. Clutch
1) Rotational speeds before the coupling process: driving part _____ rpm; driven part _____ rpm
2) Engaging process*
a) at a standstil ☐ b) at the full load ☐ c) Without any load ☐
3) Maximum load torque during engagement _____ Nm
4) Maximum load torque after engagement _____ Nm
5) Second-degree moment of inertia (kgm²) behind the clutch, in relation to the clutch shaft _____ kgm²
6) Is a certain acceleration time necessary ? _____ sec.
7) Number of coupling processes per hour with a uniform time distribution _____
8) Most dense engaging sequenze in the case of non-uniform time distribution
(engaging/disengaging operations per time unit) _____
9) Operating time of engagement clutch _____ hours/working day

E. Installation conditions
Send a drawing showing the arrangement of the clutch.

*Underline or put a cross against the applicable items

SMART DRIVE SOLUTIONS

CONTACT

DESCH Canada Ltd.
240 Shearson Crescent
Cambridge
Ontario
Canada N1T 1J6
T +1800 2631866
+1519 6214560
F +1519 6231169
desch.canada@desch.com

DESCH USA LP
Manufacturing,
Assembly
4940 Merrifield Pkwy
Dallas, Texas
75236
T +1 330 937 9030
F +1 330 937 9031
desch.dallas@desch.com

DESCH USA LP
Sales, Engineering,
Service Support
3700 Embassy Pkwy,
Suite 530 Akron Ohio
44333
T +1 330 937 9030
F +1 330 937 9031
sales.usa@desch.com

Technical changes reserved · © DESCH North America GmbH & Co. KG ·