SMART DRIVE SOLUTIONS

DESCH Planox® - PM

Mechanically actuated clutches

Planox® - PM clutches

Fig. 1
Type PM

DESCH Planox® clutches are engageable/disengageable dry-friction clutches which transmit the torque by friction. These clutches permit rapid acceleration of the driven machines or machinery groups as well as safe torque transmission. Machines connected by friction clutches are protected against damage which can occur by peak torques during operation or during the engaging/ disengaging process. In the case of the mechanically actuated Planox® the clutch is engaged by the shift lever. As all the forces inside the clutch cancel each other when the clutch is engaged, additional axial loading of the adjacent shaft bearings is excluded. The built-in disc springs provide the following special advantages:

1. Limitation of the peak torque during the engaging process
2. Torque accurately set and limited.
3. Automatic re-adjustment over a relatively large wear and thus low maintenance.

Fig. 2 shows the torque curve of a clutch with and without dished springs. When a correctly dimensioned clutch is engaged, there is at the same time an overload protection feature against peak torques coming form the driving or driven machines.

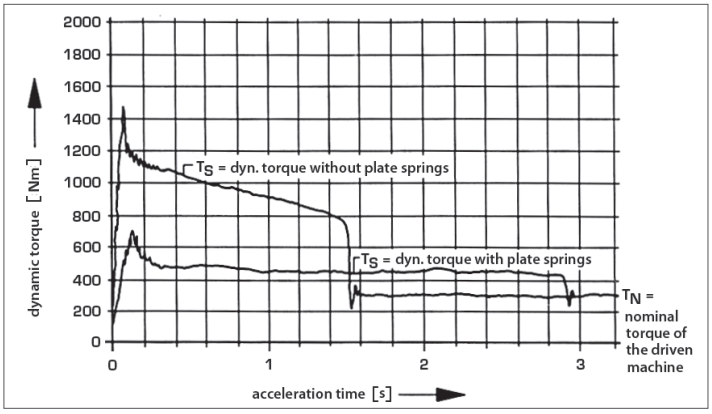

Fig. 2

Fig.3
Type PMA

Fig. 4 illustrates that the torque curve of the clutches in the range of the automatic re-adjustment of max. 1 mm is very flat. This favourable characteristic of the curve cannot be achieved by flexible levers or spiral springs.

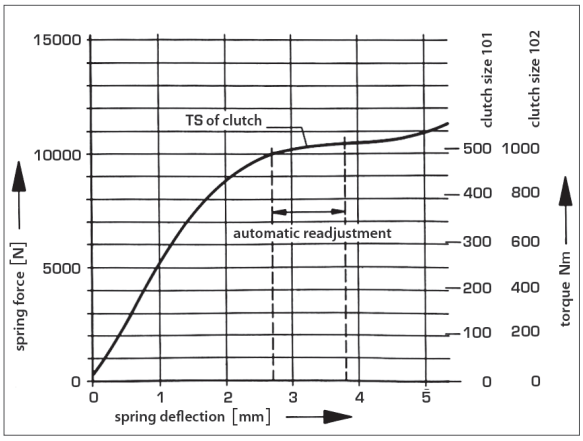

Fig. 4

The Planox® friction clutch with bell housing and outer bearing has been developed to be fitted to diesel engines. It is available as mechanically, pneumatically or hydraulically actuated clutch. The complete clutch including bearings is accommodated in a bell housing which forms a unit with the engine after being installed. This design is a technical and economic success. The powerfully dimensioned bearings of the output shaft in the clutch housing permit power take-off via flexible couplings or pulleys. The ad-missible radial loads on the output shaft end are shown as a function of speed in the table on page 8.

The flywheel and flywheel housing connections comply with the Ameican SAE standards J 617 and J 621. The connecting dimensions of the flywheel meet the American standard J 620d and the VDMA standard sheet 24 380. We have adapted the connecting dimensions of our clutches and bell housings to these standards. Assuming the SAE standards are observed on the engines, the Planox®-clutches can be mounted without the use of spacer rings. The clutch sizes for diesel engines were selected in collabortation with the engine manufacturers. **In the event of frequent engaging/disengaging or large masses to be accelerated a check of the thermal loading of the clutch must be made.**

Type PMW mechanically actuated

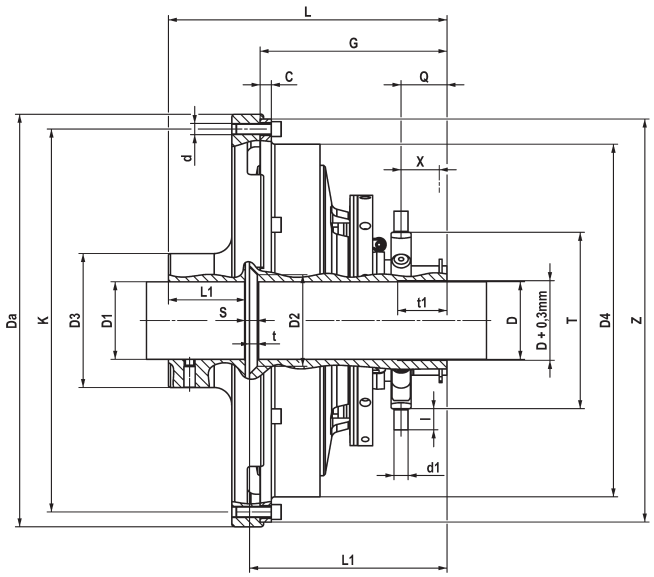

Fig. 5 Type PMW
with ball bearing shifting - Size 61-143
with slip ring shifting - Size 163-183

Dimensions in mm • can be delivered ex stock

Size	Torque	max. Speed[1] Type		C	D_a	D and D_1	D and d_1[3]	D_2	D_3	D_4	d	d_1
	$T_ü$ Nm	PMW rpm	PMF rpm			Pilot bore	(H7) max.				quantity of bolts x ø	
• 61	230	3500	3500	15	225	18	34	50	65	-	6 x M 8	14,5
• 71	320	3350	3350	16	250	18	45	65	80	-	8 x M 8	14,5
• 81	440	3000	3200	16	275	18	45	65	80	-	6 x M 10	14,5
• 101	740	2500	3000	20	325	28	60	90	105	-	8 x M 10	16,5
• 102	1450	2500	3000	44	325	28	60	90	105	-	8 x M 10	16,5
• 111	1000	2200	2850	20	365	28	60	90	105	-	8 x M 10	16,5
• 112	2000	2200	2850	44	365	28	60	90	105	-	8 x M 10	16,5
• 142	2900	1700	2500	12	480	48	90	125	155	400	8 x M 12	16,5
• 143	4400	1700	2500	12	480	48	90	125	155	400	8 x M 12	16,5
163	6600	1550	2200	16	530	58	100	130	170	450	8 x M 12	20
182	6000	1400	1960	16	585	68	110	130	185	500	8 x M 16	20
183	9000	1400	1960	16	585	68	110	130	185	500	8 x M 16	20

1) Speed is valid if outer parts are made of cast iron EN-GJL-250 (GG 25). With higher speed (max. speed look type PMF), these parts consist of EN-GJL-400-15 (GGG 40).
2) Outer centering Z: Size 61 – 143 ISO j 7, Size 161 – 183 ISO js 7.
3) The keyways usually are executed to DIN 6885/1. Clutch and flanged hub executed with 1 set screw each, displaced to the keyways by 180°.

Operating systems see page 9 – 10.
Selection of clutches see page 11.

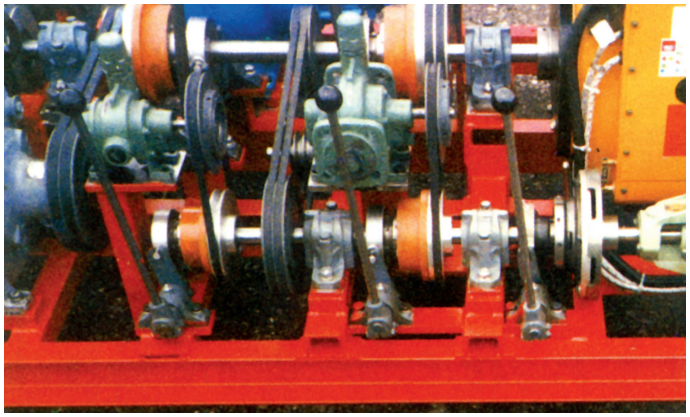

Fig. 6
Planox® clutch, type PMW in a combined transmission set for bunker boats, inclusively DESCH Conax® clutches.

Type PMF mechanically actuated

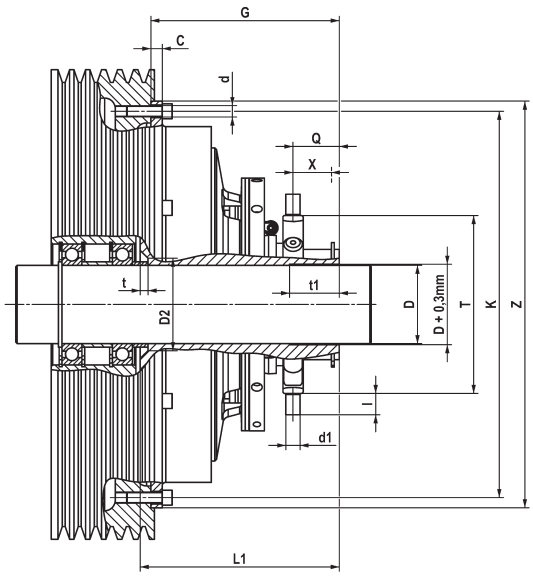

Fig. 7 Type PMF
with ball bearing shifting - Size 61-143
with slip ring shifting - Size 163-183

Dimensions in mm • can be delivered ex stock

Size	G	K	L	L1	L2	l	Q	S	T	t	t1	X	Z2)	Operating force on sleeve N	Mass (kg) Type PMW	Mass (kg) Type PMF
• 61	114	200,02	164	122	40	18	35	8	105	6	35	25,5	215,9	650	9,9	6,5
• 71	114	222,25	179	122	55	18	35	8	130	6	35	25,5	241,3	750	13,8	9,2
• 81	114	244,48	179	122	55	18	35	8	130	6	35	25,5	263,52	950	16,3	10,8
• 101	155	295,28	244	170	70	20	49	15	160	11	45	37	314,32	1150	34,2	23,6
• 102	179	295,28	268	194	70	20	49	15	160	11	45	37	314,32	1150	40,5	29,8
• 111	155	333,38	244	170	70	20	49	15	160	11	45	37	352,42	1500	39,3	26,4
• 112	179	333,38	268	194	70	20	49	15	160	11	45	37	352,42	1500	46,8	33,9
• 142	184	438,15	313	199	110	20	50	15	215	11	45	37	466,72	1750	88	60
• 143	208	438,15	337	223	110	20	50	15	215	11	45	37	466,72	1750	102	74
163	265	488,92	404	280	120	30	65	15	230	11	70	50	517,52	1900	163	123
182	235	542,92	386	250	130	30	65	17	250	11	70	50	571,5	2300	178	124
183	265	542,92	416	280	130	30	65	17	250	11	70	50	571,5	2300	206	151

Masses and mass moments of inertia refer to max. bore.

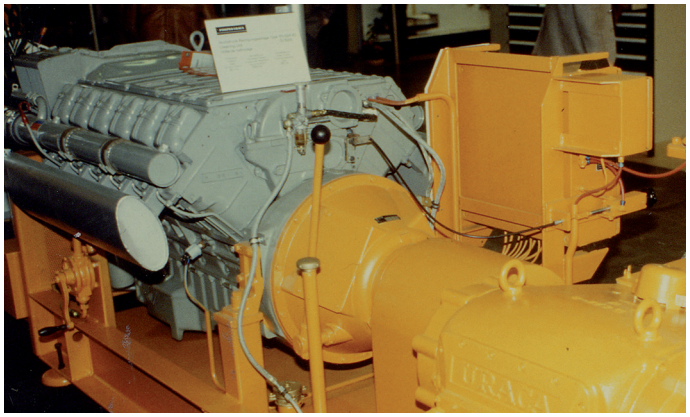

Fig. 8
Planox® clutch type PMA 143/1 fitted to DAF diesel engine DKT 1160 to drive a bow rudder.

Type PMA with outside bearing

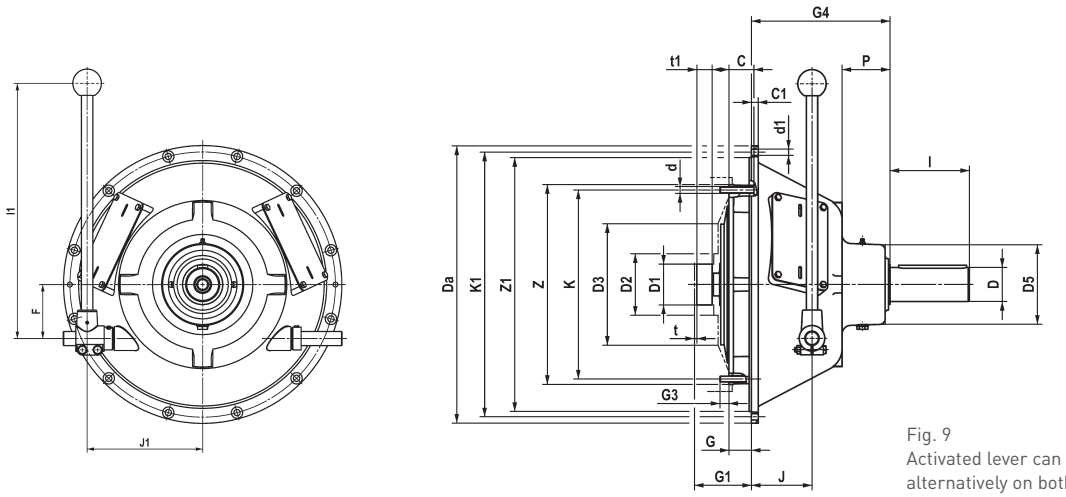

Fig. 9
Activated lever can be fitted alternatively on both sides.

Dimensions in mm resp. inches

Size	Housing connection SAE-Size	Torque $T_{ü}$ Nm	max. Speed rpm^{-1}	C	C_1	D[1)]	D_1[3)]	D_2	D_3	D_4	D_5[1)]	d Number of holes x Ø	F	G	G_1	G_2
61	-6-5-4-3	230	3500	15	8	30	2,047 52	2 ½ 63,5	5 127	7 ¼ 184,2	105	6x8,5	72,5	1 3/16 30,2	2 13/16 71,4	½ 12,7
71	-6-5-4-3	320	3350	16	8	30	2,047 52	2 ½ 63,5	- -	8 ⅛ 206,2	105	8x8,5	72,5	1 3/16 30,2	2 13/16 71,4	½ 12,7
81	-5-4-3	440	3200	16	8	40	2,441 62	3 76,2	- -	8 ⅞ 225,6	130	6x10,5	72,5	2 7/16 62	3 15/16 100,1	½ 12,7
101	-4-3-2-1	740	3000	20	10	55	2,835 72	3 76,2	7 ¼ 196,85	10 ⅞ 276,4	130	8x11	95	2 ⅛ 53,8	3 15/16 100,1	⅝ 15,7
111	-4-3-2-1	1000	2850	20	10	55	2,835 72	- -	8 203,2	12 ⅜ 314,32	130	8x11	95	1 9/16 39,6	3 15/16 100,1	1 ⅛ 28,4
112	-3-2-1-0	2000	2850	44	12	60	2,835 72	- -	8 203,2	12 ⅜ 314,32	140	8x11	95	1 9/16 39,6	3 15/16 100,1	1 ⅛ 28,4
142	-1-0-00	2900	2500	12	16	70	3,150 80	4 101,6	8 ¾ 222,25	16 ⅛ 409,4	180	8x13,5	118,5	1 25,4	3 15/16 100,1	1 ⅛ 28,4
143	-1-0-00	4400	2500	12	16	70	3,150 80	4 101,6	8 ¾ 222,25	16 ⅛ 409,4	180	8x13,5	118,5	1 25,4	3 15/16 100,1	1 ⅛ 28,4
163	-0-00	6600	2200	16	18	80	3,937 100	4 ⅛ 104,6	10 254	18 ⅛ 460,2	190	8x13,5	145	⅝ 15,7	3 15/16 100,1	1 ⅛ 28,4
182	-0-00	6000	1960	16	18	80	3,937 100	4 ⅛ 104,6	- -	19 ⅝ 498,3	190	6x18	145	⅝ 15,7	3 15/16 100,1	1 ¼ 31,8
183	-0-00	9000	1960	16	18	90	3,937 100	4 ⅛ 104,6	- -	19 ⅝ 498,3	220	6x18	145	⅝ 15,7	3 15/16 100,1	1 ¼ 31,8

Housing dimensions

SAE-housing		6	5	4	3	2	1	0	00
Z1[2)]	inch mm	10 ½ 266,7	12 ⅜ 314,32	14 ¼ 361,95	16 ⅛ 409,58	17 ⅝ 447,68	20 ⅛ 511,17	25 ½ 647,7	31 787,4
K1	inch mm	11 ¼ 285,75	13 ⅛ 333,37	15 381	16 ⅞ 428,62	18 ⅜ 466,72	20 ⅞ 530,22	26 ¾ 679,45	33 ½ 850,9
Da	inch mm	12 ⅛ 307,97	14 355,6	15 ⅞ 403,22	17 ¼ 450,85	19 ¼ 488,95	21 ¾ 552,45	28 711	34 ¾ 883
Number of hole Hole-Ø d1		8 11	8 11	12 11	12 11	12 11	12 11	16 13,5	16 13,5

Fig. 10
Planox® clutch type PMA-HR 183/0 combined with a Voith turbo coupling 650 TG in one of the biggest crusher plants.
Engine output P = 550 kW at n = 2100 rpm

Dimensions in mm resp. inches

Size	G_3	G_4	J	K	l[1)]	l_1[1)]	p[1)]	t	t_1	Z[2)]	J1 with SAE-housing							
											6	5	4	3	2	1	0	00
61	⅜ 9,7	5 9/16 141,288	51,5	7 ⅞ 200,02	80	400	34	1/16 1,583	11/16 17,463	8 ½ 215,9	160	175	175	195	-	-	-	-
71	½ 12,7	5 9/16 141,288	51,5	8 ¾ 222,25	80	400	34	1/16 1,583	11/16 17,463	9 ½ 241,3	160	175	175	195	-	-	-	-
81	½ 12,7	7 1/16 179,388	47	9 ⅝ 244,48	110	400	59	1/16 1,583	¾ 19,05	10 ⅜ 263,52	-	170	220	210	-	-	-	-
101	½ 12,7	8 ⅝ 219,075	78	11 ⅝ 295,28	110	450	78	1/16 1,583	1⅛ 28,58	12 ⅜ 314,32	-	-	190	205	205	225	-	-
111	⅞ 22,4	9 ¼ 234,95	78	13 ⅛ 333,38	110	450	94	1/16 1,583	1 ¼ 31,75	13 ⅞ 352,42	-	-	190	205	205	225	-	-
112	⅞ 22,4	9 ⅝ 244,475	107	13 ⅛ 333,38	140	450	84	1/16 1,583	1 ¼ 31,75	13 ⅞ 352,42	-	-	-	205	205	225	240	-
142	⅞ 22,4	13 ¾ 349,255	140	17 ¼ 438,15	140	600	79,5	⅛ 3,175	1 ½ 38,1	18 ⅜ 466,72	-	-	-	-	-	260	320	325
143	⅞ 22,4	14 ½ 368,3	140	17 ¼ 438,15	140	600	98,5	⅛ 3,175	1 ½ 38,1	18 ⅜ 466,72	-	-	-	-	-	260	320	320
163	⅞ 22,4	16 11/16 423,863	205	19 ¼ 488,92	170	750	79,5	⅛ 3,175	1 ¾ 44,45	20 ⅜ 517,52	-	-	-	-	-	-	310	360
182	1 ¼ 31,8	16 11/16 423,863	205	21 ⅜ 542,92	170	750	79,5	⅛ 3,175	1 ¾ 44,45	22 ½ 571,5	-	-	-	-	-	-	310	360
183	1 ¼ 31,8	18 ¼ 463,55	205	21 ⅜ 542,92	170	750	119,5	⅛ 3,175	1 ¾ 44,45	22 ½ 571,5	-	-	-	-	-	-	310	360

1) These dimensions are not to SAE, shaft end dimensions to DIN 748, up to D = 50 k6 more than D = 50 m6.

2) Outer centering Z:
Size 61 – 143 ISO j 7;
Size 163 – 183 ISO js 7
Centering Z1:
SAE-housing 6 – 2 ISO j 7;
SAE 1 – 00 ISO js 7.

3) The appropriate bore should be made according to ISO j 6. Selection clutches see pages 11. Allowable radial load see page 8. Moments of inertia and masses see page 5. Operating systems see page 9 and 10.

The Planox® clutches, type PMA with bell housing, have been allocated to Diesel engines a accordance with the enginge manufacturers. The engine/clutch recommendations are available on request. Fitting dimensions of Planox® clutches are in accordance with SAE standards J 617, J 620 d and J 621 resp. VDMA standards sheet 24 380.

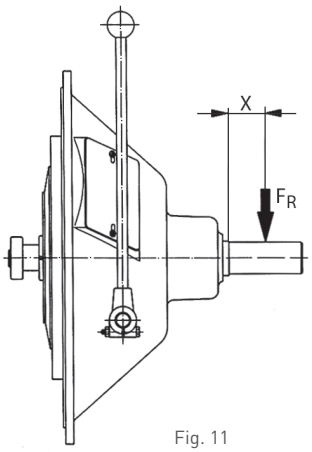

Fig. 11

The allowable radial load F_R is to be calculated with the tangential force F_N and the factor A according to the following formula:

$$F_R = F_N \cdot A$$

$$F_N = \frac{P \cdot 9550}{n \cdot r} \quad [N]$$

Kind of drive:	=	Factor A
Open flat belt drive	=	4
Drive with tension pulley	=	2,5
V-belt drive	=	2,5
Gear or chain drive	=	1,25
Radius of V-belt pulley or chain drive m	=	r

Size	Speed rpm	Max. allowable load [N] for type PMA Distance X (mm)					Masses [kg] for type PMA SAE- housing							
		25	50	75	100	125	6	5	4	3	2	1	0	00
61	1000	3500	3100				18,4	18,7	20,3	21,4	-	-	-	-
61	2000	2900	2600											
61	3000	2500	2300											
61	3500	2400	2200											
71	1000	3500	3100				22,0	22,3	23,8	24,9	-	-	-	-
71	2000	2900	2600											
71	3000	2500	2300											
71	3350	2400	2200											
81	1000	6000	5600	5100			-	26,5	28,3	29,5	-	-	-	-
81	2000	4900	4500	4200										
81	3000	4300	4000	3700										
81	3200	4200	3900	3600										
101	1000	14300	11500	10400			-	-	56	55	58	55	-	-
101	2000	12500	10500	9000										
101	3000	10500	9500	8000										
111	1000	14500	12000	11000			-	-	59	58	61	58	-	-
111	2000	12500	11000	10000										
111	2850	10500	10000	9500										
112	1000	19000	17000	13500			-	-	-	70	73	76	86	-
112	2000	17000	15000	12500										
112	2850	14000	13500	12000										
142	500	27600	26000	24800	23600		-	-	-	-	-	142	161	179
142	1000	26000	24000	22000	19200									
142	2000	24000	22000	20000	17500									
142	2500	22000	20000	19000	16000									
143	500	32000	26500	23900	22800		-	-	-	-	-	157	176	194
143	1000	27000	24000	21000	18500									
143	2000	25000	22000	20000	17000									
143	2500	24000	22000	19500	16500									
163	500	35000	34000	32500	31000	29000	-	-	-	-	-	-	260	297
163	1000	28000	27000	26000	25000	23000								
163	1500	26500	26000	25000	24000	22000								
163	2200	24000	23000	22500	21500	20000								
182	500	33000	32000	30500	29500	26600	-	-	-	-	-	-	263	300
182	1000	31000	30000	28000	26000	22000								
182	1500	27500	26500	25500	23500	20000								
182	1960	25000	24000	23000	21000	18500								
183	500	48000	46000	44000	40000	37000	-	-	-	-	-	-	303	339
183	1000	41000	39500	38000	36500	34500								
183	1500	37000	35500	35000	32500	31000								
183	1960	34500	33000	31500	28000	27000								

These indications refer to 5.000 hours. For 10.000 hours to be multiplied by 0,8; for 15.000 hours to be multiplied by 0,68.

Mechanically actuated types

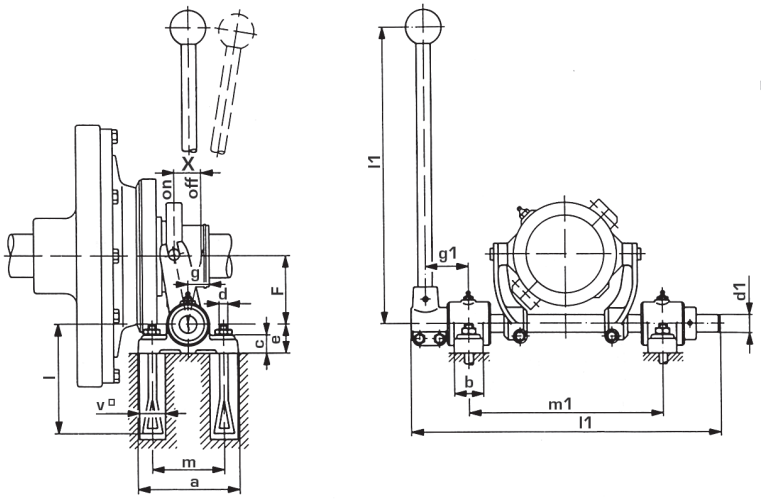

Note:
When the clutch is running the slip ring must be free of load. If necessary, the hand lever should be supported.

Fig. 12 Type SH for Planox® PMW and PMF

Dimensions in mm

Lever size	Clutch size	a	b	c	d	d_1	e	F	g ca.	g_1	l	l_1	l_2	m	m_1	v	X	Weight ca. kg
6 – 0	61; 71; 81	110	35	18	M10	20	30	72,5	22	45	160	400	355	75	225	50	25,5	4,2
10 – 0	101; 102; 111; 112	140	40	25	M12	25	40	95	30,5	60	160	450	430	100	270	50	37	9,5
14 – 0	142; 143	140	40	25	M12	30	40	117,5	35	65	160	600	490	100	310	50	37	13
16 – 0	163; 182; 183	160	45	25	M12	35	50	145	40	70	160	750	565	120	365	50	50	18

Operating systems pneumatically/mechanically

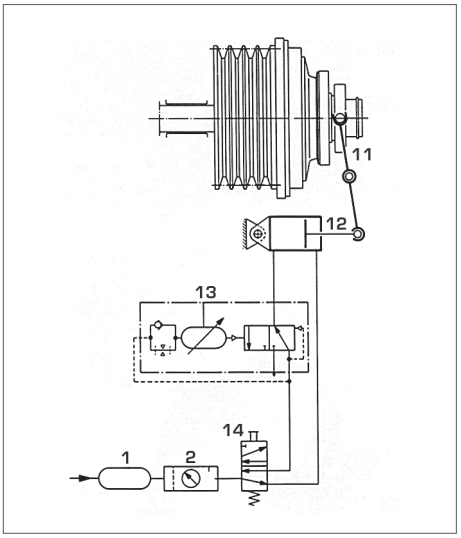

Fig. 13 Pneumatic/mechanical actuated system of a Planox® clutch, type PM with hand-actuated 4-way-valve.

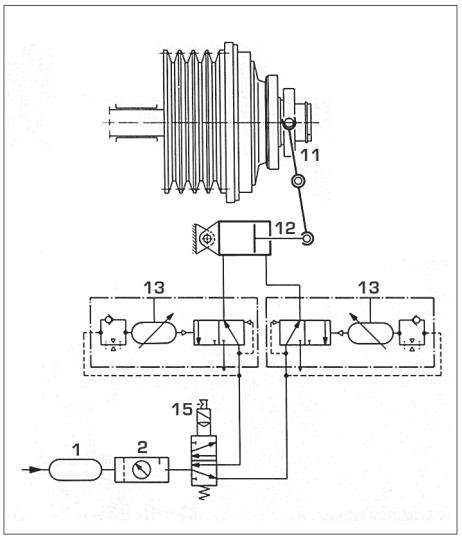

Fig. 14 Pneumatic/mechanical actuated of a Planox® clutch, type PM with electromagnetic 4-way-valve.

Pneumatic elements

1. Compressed air tank: Tank in which the compressed air is stored up to a maximum pressure.

2. Maintenance unit: The maintenance unit consists of combination of filter, pressure reducing valve and line oiler.

11. Activated device

12. Double-acting cylinder

13. Time control valve: The valve will delay the release of the air and connects the working line in change with the pressure line resp. with the atmosphere.

14. 4-way valve: serves for the alternating connection of the main air pipe with the controlled pipes resp. of the controlled pipes with the atmosphere.

15. 4-way magnetic valve:
permits alternating connection of the conduit controlled to the main ait piping and to the atmosphere by closing or interrupting the circuit, respectively.

Activated systems according to the activated conditions are available on request.

Operating systems pneumatically/mechanically

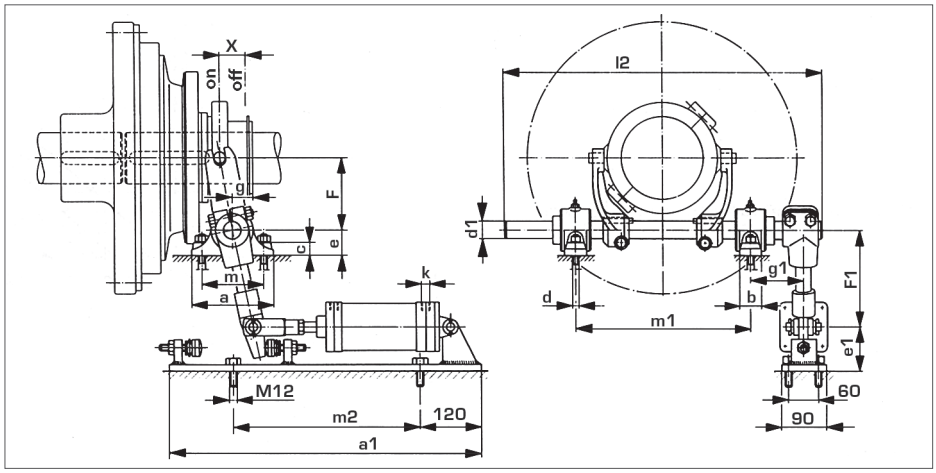

Fig. 15 Type SPWF for Planox® clutch PMW and PMF

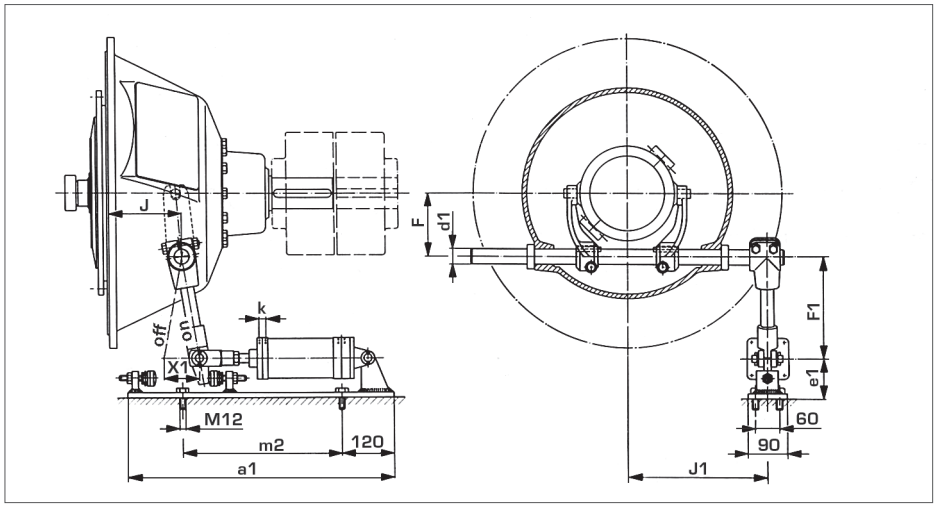

Fig. 16 Type SPA for Planox® clutch PMA

The engaging forces can be taken from the appropriate clutches

Dimensions in mm

Lever size	Clutch size	a	a_1	b	c	d	d_1	e	e_1	J	J_1
6 – 0	61; 71; 81	110	610	35	18	M10	20	30	85	see page 6 – 7	
10 – 0	101; 102; 111; 112	140	610	40	25	M12	25	40	85	see page 6 – 7	
14 – 0	142; 143	140	610	40	25	M12	30	40	85	see page 6 – 7	
16 – 0	163	160	610	45	25	M12	35	50	85	see page 6 – 7	
18 – 0	182; 183	160	765	45	25	M12	35	50	95	see page 6 – 7	

Switch size	Clutch size	F	F1	g	g1	k	l2	m	m1	m²	X
6 – 0	61; 71; 81	72,5	228	20	59	M 18 x 1,5	385	75	225	365	25,5
10 – 0	101; 102; 111; 112	95	205	30,5	76	M 18 x 1,5	465	100	270	365	37
14 – 0	142; 143	117,5	255	35	81	M 18 x 1,5	525	100	310	365	37
16 – 0	163	145	232	40	86	M 18 x 1,5	600	120	365	365	50
18 – 0	182; 183	145	310	40	86	M 22 x 1,5	600	120	365	495	50

Selection of clutch size

Directions for selection

Definitions and calculations are according to VDI-regulations 2241, page 1 for externally operated clutches and brakes.

For vibrational calculations we refer to DIN 740. Further more we can offer to carry out torsional vibration simulations of the components upon special request.

Other materials can be supplied for classification and for higher speeds.

The symbols have following meaning:

n = Nominal speed [rpm]

P = Drive capacity [kW]

S = Safety factor

$T_ü$ = Static clutch torque [Nm]

As a general principle the design of a clutch should be orientated to the maximum load. This can be constituted either by the amount of torque to be transmitted, the amount of frictional heat generated by a high engagenment frequency, or by large inertal masses to be accelerated.

The size of the clutch must be considered with great care to enable its performance to meet the drive requirements. The operating conditions and performance data must be known in order to select the correct size and type of clutch unit.

The most important points are as follows:

1. Type of driving machine (Electric motor, diesel engine, ect.)

2. Capacity P [kW]

3. Nominal speed and engagement speed n [rpm]

4. Type of driven machine

5. Highest torque load during engagement T_L [Nm]

6. Moment of inertai J_L referred to the clutch output shaft [kgm²]

7. Number of clutch engagements per hour S_h [1/h]

8. Engagement time t_s [s]

9. Ambient temperature [°C]

10. Type of clutch control required

Selection of clutch size

Selection of clutch size according to mechanical load

The torque values $T_ü$ = static torque of clutch in Nm are listed in the tables.

The torque values stated can be transmitted under constant load. However, in the event of varying load conditions the corresponding operating factors „S“ must be taken into consideration: These can be found in the tables.

Peak torques can occur during engagement or operation dependent on the types of machines being coupled. The clutch size should always be orientated to the maximum load.

The required, static clutch torque is calculated with drive capacity (P) and nominal speed (n) in consideration of the safety factor „S“.

$$T_ü = \frac{P}{n} \cdot 9550 \cdot S \text{ (Nm)}$$

Selection of clutch size according to mechanical load and friction work

Besides ensuring optimum torque transmission the friction clutch must also be able to withstand the heat generated during the engagement process.

It is known that 50% of the work required for acceleration is converted to heat during this process. In case of machines where power is also taken by the machine during the acceleration process (i.e. the machine stars under load) then the friction work increases by the ratio of the clutch torque to the load torque.

The thermal calculation of the drive depends on a lot of different factors. We will do a thermal calculation based on your specific technical requirements as the basis for our offer to you.

Operating factors „S“			
Driving machine	Load symbol of application *		
	G	M	S
Electric motors, Turbines, Hydraulic motors	1,2	1,6	1,8
Piston engines 4 – 6 cylinders	2,0	2,5	2,8
Piston engines 1 – 3 cylinders	2,2	2,8	3,2
Reference values of service faktor „S“			

* Selection page 13

Safety factors „S"

Assignment of load characteristics according to type of working machine					
	DREDGERS		RUBBER MACHINERY		PUMPS
S	Bucket conveyor	S	Extruders	S	Piston pumps
S	Landing gear (caterpillar)	M	Calenders	G	Centrifugal pumps (light liquids)
M	Landing gear (rail)	S	Kneading mill	M	Centrifugal pumps (viscous liquids)
M	Manoeuvring winches	M	Mixers	S	Plunger pumps
M	Pumps	S	Rolling mills	S	Press pumps
S	Impellers		WOOD WORKING MACHINES		STONE AND CLAY WORKING MACHINES
S	Cutter heads	S	Barkers	S	Crusher
M	Slewing gear	M	Planing machines	S	Rotary ovens
	GENERATORS, TRANSFORMERS	G	Wood working machines	S	Hammer mills
M	Frequency transformers	S	Saw frames	S	Ball mills
M	Generators		CRANES	S	Tube mills
M	Welding generators	G	Luffing gear block	S	Beater mills
	CHEMICAL INDUSTRY	S	Travelling gear	S	Brick presses
M	Cooling drums	G	Hoist gear		TEXTILE MACHINES
M	Mixers	M	Slewing gear	M	Batchers
G	Agitators (liquid material)	M	Derricking jib gear	M	Printing and dyeing machines
M	Agitators (semi-liquid material)		PLASIC INDUSTRY MACHINES	M	Tanning vats
M	Drying drums	M	Extruders	M	Willows
G	Centrifuges (light)	M	Calenders	M	Looms
M	Centrifuges (heavy	M	Mixers		COMPRESSORS
	Oil Industry	M	Crushers	S	Piston compressors
M	Pipeline pumps		METAL WORKING MACHINES	M	Turbo compressors
S	Rotary drilling equipment	M	Plate bending machines		METAL ROLLING MILLS
	CONVEYORS	S	Plate straightening machines	S	Plate shears
M	Pit-head winches	S	Hammers	M	Manipulator for turning sheets
S	Winding engines	S	Metal planning machines	S	Ingot pushers
M	jointed-band conveyors	S	Presses	S	Ingot and slabbing-mill train
G	Belt conveyors (bulk material)	M	Shears	S	Ingot handling machinery
M	Belt conveyors (piece goods)	S	Forging presses	M	Wire drawing benches
M	Band pocket conveyors	S	Punch presses	S	Descaling machines
M	Chain conveyors	G	Countershafts, line shafts	S	Thin plate mills
M	Circular conveyors	M	Machine tools (main drives)	S	Heavy and medium plate mills
M	Load elevators	G	Machine tools (auxiliary drives)	M	Winding machines (strip and wire)
G	Bucket conveyors for flour		FOOD INDUSTRY MACHINERY	S	Cold rolling mills
M	Passenger lifts	G	Bottling and container filling machines	M	Chain tractor
M	Plate conveyors	M	Kneading machines	S	Billet shears
M	Screw conveyors	M	Mash tubs	M	Cooling beds
M	Ballast elevators	G	Packaging machines	M	Cross tractor
S	Inclined hoists	M	Cane crushers	M	Roller tables (light)
M	Steel belt conveyors	M	Cane cutters	S	Roller tables (heavy)
M	Drag chain conveyors	S	Cane mills	M	Roller straighteners
	BLOWERS,VENTILATORS	M	Sugar beet cutters	S	Tube welding machines
M	Rotary piston blowers	M	Sugar beet washing machines	M	Trimming shears
G	Blowers (axial/radial)		PAPER MACHINES	S	Cropping shears
M	Cooling tower fans	S	Couches	S	Continuous casting plant
M	Induced draught fans	S	Glazing cylinders	M	Rollers adjustment drive
G	Turbo blowers	M	Pulper	S	Manipulators
	BUILDING MACHINERY	S	Pulp grinders		LAUNDRIES
S	Hoists	M	Calenders	M	Tumblers
G	Concrete mixers	S	Wet presses	M	Washing machines
S	Road construction machinery	S	Willows		Water treatment
		S	Suction presses	M	Aerators
		S	Suction rolls	M	Screw pumps
		S	Drying cylinders		

Questionnaire for mechanical Planox® clutches

Inquiry No. _____ dated _____
Company _____
Road _____
Location _____
Requirements _____ pieces/ordes

Offer no. _____ dated _____
DESCH Antriebstechnik GmbH & Co. KG
Postbox 1440
59753 Arnsberg / Germany
Processed by: _____

A. Application
1) Type of application _____
2) Ambient conditions (temperature, humidity, polution etc.)
_____
_____
_____
3) Special requirements (ATEX, approval acc. to DIN EN 10204 etc.)
_____
_____
_____

B. Driving machine (Prime mover)
1) Type of driving machine (e.g. electric motor, turbine or diesel engine) _____
2) Power _____ kW rotational speed _____ rpm
3) Nominal torque of the driving machine _____ Nm
4) Max. torque of the driving machine _____ Nm
(pull-out torque of the electric motor)
5) Nominal speed of driving machine _____ Nm
6) Maximum speed of driving machine _____ Nm
7) If a diesel engine is used: Make _____ Type _____ Number of cylinders _____
8) Flywheel and flywheel-housing connection (e. g. SAE data and perhaps sketch) _____

C. Driven machine (Driven machine)
1) Type of driven machine (e.g. generator, pump or compressor) _____
2) At what location is the clutch used? (e.g. main drive, slewing drive or suction pump) _____
3) Component between drive and driven machine for example belt drive, gear etc. i = _____

D. Clutch
1) Rotational speeds before the coupling process: driving part _____ rpm; driven part _____ rpm
2) Engaging process*
a) at a standstil ☐ b) at the full load ☐ c) Without any load ☐
3) Maximum load torque during engagement _____ Nm
4) Maximum load torque after engagement _____ Nm
5) Second-degree moment of inertia (kgm²) behind the clutch, in relation to the clutch shaft _____ kgm²
6) Is a certain acceleration time necessary ? _____ sec.
7) Number of coupling processes per hour with a uniform time distribution _____
8) Most dense engaging sequenze in the case of non-uniform time distribution
(engaging/disengaging operations per time unit) _____
9) Operating time of engagement clutch _____ hours/working day

E. Installation conditions
Send a drawing showing the arrangement of the clutch.

*Underline or put a cross against the applicable items

SMART DRIVE SOLUTIONS

CONTACT

DESCH Canada Ltd.
240 Shearson Crescent
Cambridge
Ontario
Canada N1T 1J6
T +1800 2631866
+1519 6214560
F +1519 6231169
desch.canada@desch.com

DESCH USA LP
Manufacturing,
Assembly
4940 Merrifield Pkwy
Dallas, Texas
75236
T +1 330 937 9030
F +1 330 937 9031
desch.dallas@desch.com

DESCH USA LP
Sales, Engineering,
Service Support
3700 Embassy Pkwy,
Suite 530 Akron Ohio
44333
T +1 330 937 9030
F +1 330 937 9031
sales.usa@desch.com

Technical changes reserved · © DESCH North America GmbH & Co. KG ·