SMART DRIVE SOLUTIONS

DESCH Lutex® CLUTCH/BRAKE COMBINATION

pneumatically actuated

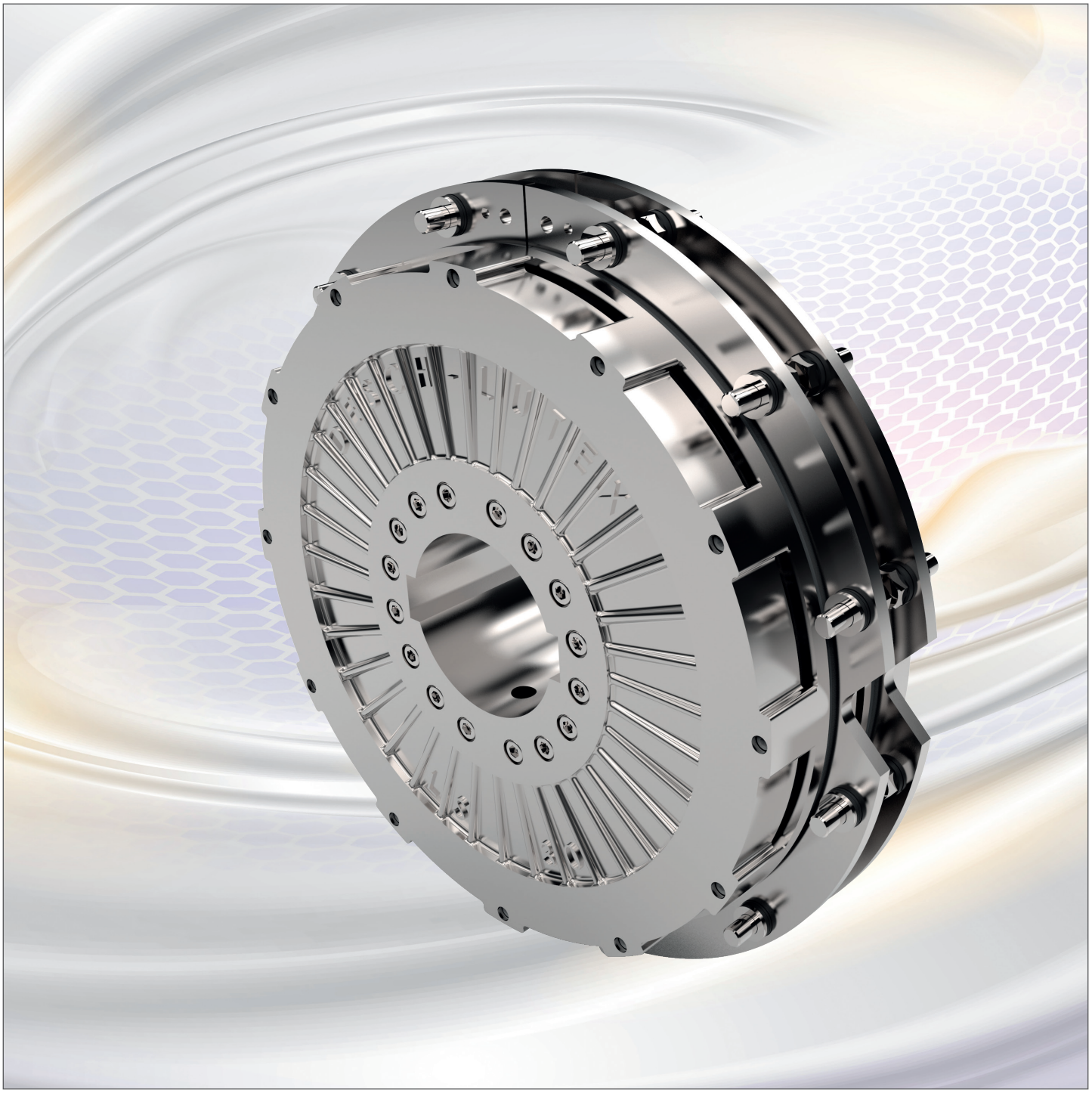

LS 19 · GB

Lutex® clutch/crake combination LS

Application area

The pneumatically actuated Lutex® LS is a dry-operating single-disc clutch/brake combination (called C-B-C below) - a further development of the proven Lutex® LKB. With an increased power density, the Lutex® LS is particularly suitable for considerably higher rotational speed with increased torques. It can be used ideally for the acceleration and deceleration of medium and high mass moments of interia. The high engaging frequencies with the shortest possible engaging times demanded in press design are reliably achieved by the C-B-C with high thermal stressability and a long service life of the special friction linings. The Lutex® LS type series is therefore predestined for press and shear drives, single-stroke or continuous-running operation. Due to its compact construction, the C-B-C can be installed in the smallest of spaces between the machine frame and flywheel. The C-B-C conforms to the safety requirements of the EN 692: 2005+A1:2009.

Function

The C-B-C is mounted on the shaft. The friction plate on the brake side is connected with the machine frame and the friction plate on the clutch side with the flywheel. If the C-B-C is not pressurised, the brake is closed via the spring force. If pressure is applied to the cylinder with compressed air, the pressure acts against the spring force and, as soon as the pressure force is greater than the spring force, the piston shifts to the friction plate on the clutch side. The brake opens and the clutch closes. In this respect, an overlap of the clutch and the brake is impossible. The friction plates can be fastened either with a 12-point suspension or with a 2-point suspension. The 2-point suspension can be carried out in a long and/or short structural shape.

Benefits of the Lutex®-LS

- Increase in productivity as a result of higher rotational speeds and torques
- Low-maintenance, safety in operation and reliability
- High power density and low mass moment of inertia
- Large maximum bores
- High thermal stressability
- Low air consumption
- Short engaging times
- Exact engaging method with a high repeat accuracy
- Large wear volume
- Highly stressable friction linings with maximum durability
- 2-point suspension with plastic collar bushes for shock absorption and noise suppression
- The Friction plates can be replaced rapidly and without any problems
- Great variation possibilities of the friction plate suspension
- Variable spring equipment permits optimum design of the clutch and brake torques
- Certificate of conformity to safety regulations
- Clamping elements can be used on both sides

Installation hints

The friction surfaces must be kept free of grease and oil. Ventilation holes should be provided in the machine frame and the flywheel to allow cirlulation of air to the friction discs. The bore of the C-B-C is provided with two keyways (acc. to DIN 6885/1) which are displaced by 180° (special keyway are also aviable). The two bore "d" for air supply are displaced 90° to the keyways. The operating pressure is 6 bar. To simplify assembly and disassembly the friction discs are in two halves. At the brake side the strap with the square bush collar should be mounted at the lower end. The C-B-C should only be mounted on horizontal shafts. Units for mounting on inclined or vertical shafts are also aviable. For further information regarding shaft sealing please see page 6.

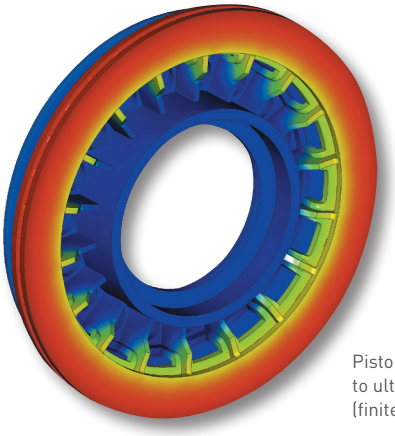

Piston of a Lutex® LS developed according to ultramodern FEM calculation (finite element method)

Technical data

Type	Mounting of the friction disc				
	clutch disc		brake disc		
	12 – point	2 – point short strap	12 – point	2 – point short strap	2 – point long strap
LS	•		•		
LSZ		•		•	
LSBZ	•			•	
LSKZ		•	•		
LSZU		•			•
LSBZU	•				•

Type LS

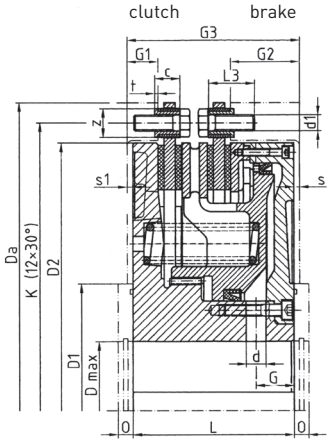

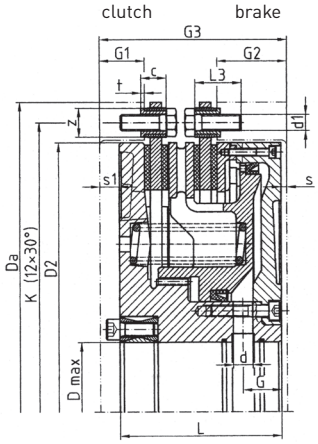

Fig. 1 Construction with grooves

Construction with clamping element

Type LSZ

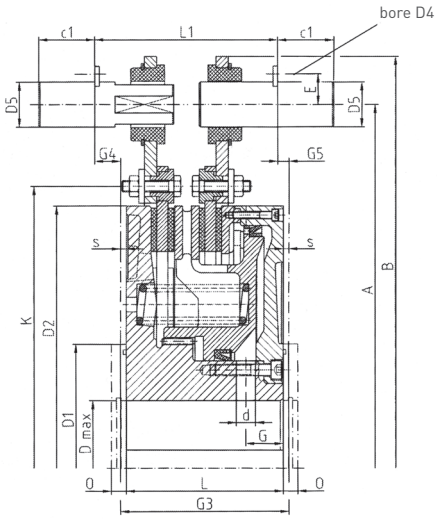

Fig. 2

Type LSBZ

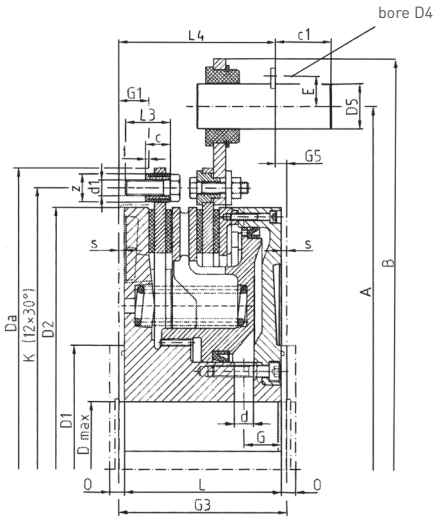

Fig. 3

Type LSKZ

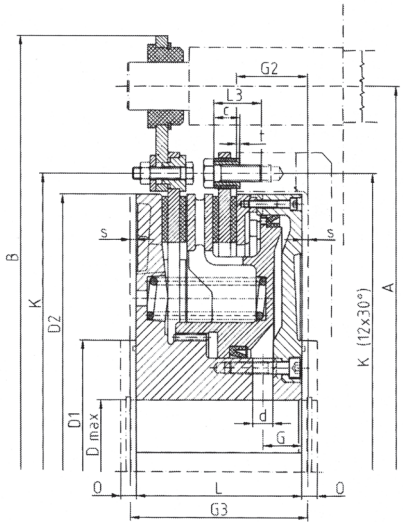

Fig. 4 (Bolt design when ordered)

Type LSZU

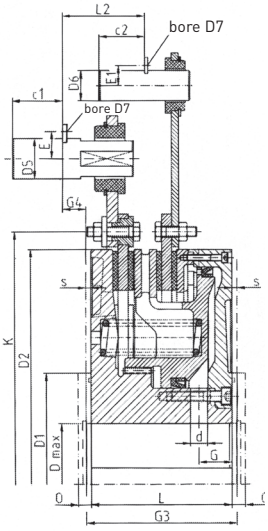

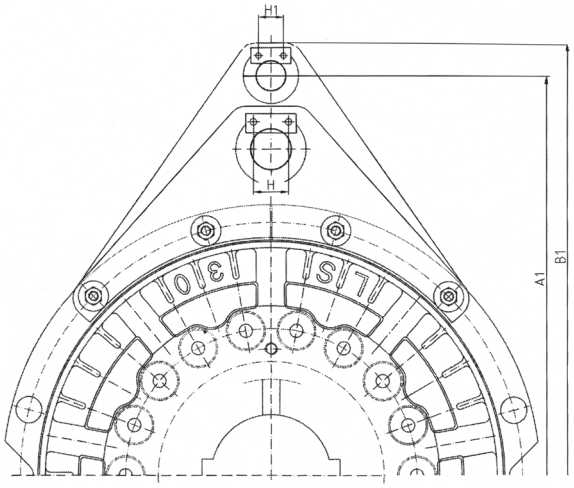

Fig. 5

Type LSBZU

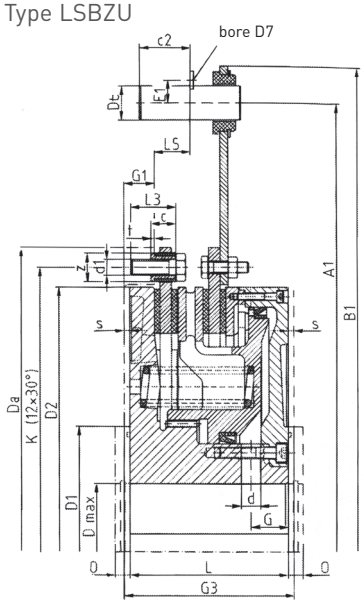

Fig. 6

Size		15	20	25	30	40	45	50	55
Weight ca. kg	LS	12,5	26,3	53,9	103	164	223	329	477
	LSZ	14,9	29,1	64,6	115	183	225	362	533
	LSZU	14,7	28,7	62,3	114	179	252	364	525
	LSBZ	13,7	27,7	56,3	109	172	235	346	498
	LSBZU	13,5	27,3	56,9	108	170	235	347	497
J inside kgm²	all types	0,063	0,231	0,756	2,00	4,76	7,62	14,35	25,66
J outside kgm²	LS/ LSBZ/ LSBZU	0,020	0,056	0,189	0,626	1,25	2,13	4,05	7,50
	LSZ/ LSZU	0,049	0,111	0,529	1,13	2,20	4,36	7,00	13,37
Cylindervolume dm³	new[1]	0,12	0,23	0,51	1,12	1,77	2,2	3,1	3,54
	worn[1]	0,18	0,34	0,74	1,43	2,48	3,12	4,64	5,52
Linear dimension in mm	A JS 10[2]	315	390	510	610	705	780	880	985
	A_1 JS 10[2]	410	490	665	790	885	990	1135	1235
	B	360	435	605	695	815	905	1000	1135
	B_1	442	522	710	855	950	1057	1235	1335
	c	12	15	19	22	27	28	35	36
	c_1	35	35	50	50	60	70	70	90
	c_2	20	20	35	45	45	50	60	60
	E	16,0	16,0	27,0	27,0	29,5	38,5	38,5	44,5
	E_1	11,0	11,0	16,0	20,0	20,0	27,0	29,5	29,5
	H	25	25	35	35	35	45	45	45
	H_1	20	20	25	25	25	35	35	35
	G	18,5	23,0	27,0	33,0	37,5	44,0	47,0	55,0
	G_1 (with grooves)	15,0	18,0	21,0	27,0	30,0	32,0	34,0	39,0
	G_1 (with clamping set)	32,5	27,5	31,0	39,0	42,0	44,0	48,0	53,0
	G_2	24,0	30,5	49,0	60,0	68,0	84,0	90,0	100,0
	G_3 (with grooves)	74,0	90,0	122,0	150,0	170,0	195,0	215,0	240,0
	G_3 (with clamping set)	91,5	99,5	132,0	162,0	182,0	207,0	229,0	254,0
	G_4	6,0	6,0	15,5	5,5	8,0	7,5	13,0	17,5
	G_5	2,0	6,5	12,5	27,5	30,0	44,5	43,0	40,0
	L (grooves/clamping set)	66/74	82,0	112,0	140,0	160,0	185,0	205,0	230,0
	L_1	78,0	89,5	125,0	128,0	148,0	158,0	185,0	217,0
	L_2	39,0	49,0	60,5	66,5	80,5	81,0	98,5	107,5
	L_4 (with grooves)	67,0	83,5	109,5	122,5	140,0	150,5	172,0	200,0
	L_4 (with clamping set)	84,5	93,0	119,5	134,5	152,0	162,5	186,0	214,0
	L_5	19,5	25,0	24,0	34,0	42,5	41,5	51,5	61,0
	s	4	4	5	5	5	5	5	5
	s_1	13,5	13,5	15	17	17	17	19	19
	t	2	3	3	3	3	5	5	5
	O	10	13	13	13	15	15	15	15
Diameter in mm	D_a	275	347	435	535	620	680	775	865
	D_1	105	135	165	220	240	260	290	320
	D_2	235	304	380	465	543	593	675	755
	D_4	5,5	5,5	6,5	6,5	6,5	8,5	8,5	8,5
	D_5 ISO k6[2]	22,0	22,0	40,0	40,0	45,0	55,0	55,0	65,0
	D_6 ISO k6[2]	14,0	14,0	22,0	30,0	30,0	40,0	45,0	45,0
	D_7	4,5	4,5	5,5	5,5	5,5	6,5	6,5	6,5
	d	8	9	13	17	18	20	21	23
	d1[3]	M6	M8	M10	M14	M14	M16	M20	M24
	xL_3	20	25	35	40	45	50	60	70
	K JS 10[2]	255	325	408	500	584	640	725	810
	Z – 0,1	12	15	18	25	25	30	35	40
	D_{max} (ISO H7)[4] Groove DIN 6885 page 1	50	70	95	125	145	160	180	200
	D_{min} (ISO H7)[4]	35	45	55	70	80	90	100	110

In the range of max. speed (ca. 0,7x n_{max}) we recommend dynamical balancing.
1) Type with reduced cylinder volume on request
2) Tolerances for connecting parts
3) Self-locking screws
4) Optional with clamping elements. Special designs upon request

Torques

Torques and speed depending on the air pressure and no. of springs

LS	no. of springs	brake[7] dyn. brake torque Ts[6] [Nm]	brake opens at pr [bar]	Clutch[7] static clutch torques Tü[5] [Nm] at p [bar] and max. allowed speed nK [rpm]											
				[bar] 6 [Nm]	nK max. [rpm]	[bar] 5,5 [Nm]	nK max. [rpm]	[bar] 5 [Nm]	nK max. [rpm]	[bar] 4,5 [Nm]	nK max. [rpm]	[bar] 4 [Nm]	nK max. [rpm]	[bar] 3,5 [Nm]	nK max. [rpm]
15	18	617	3,27	608	2129	478	2129	349	2129	220	2129	91	2129	-	-
	15	514	2,73	765	2236	636	2555	506	2555	377	2555	248	2555	119	2555
	12	411	2,18	922	1887	793	2183	664	2588	534	3000	405	3000	276	3000
	9	308	1,64	1079	1632	950	1849	821	2131	691	2516	562	3000	433	3000
	6	206	1,09	1236	1438	1107	1603	978	1812	849	2038	719	1448	590	2970
20	18	1118	3,18	1116	2082	855	2082	594	2082	332	2082	71	2082	-	-
	15	932	2,65	1452	2118	1191	2200	930	2200	669	2200	408	2200	146	2200
	12	745	2,12	1788	1789	1527	2069	1266	2200	1005	2200	744	2200	483	2200
	9	559	1,59	2125	1548	1864	1753	1602	2021	1341	2200	1080	2200	819	2200
	6	373	1,06	2461	1364	2200	1521	1939	1719	1678	1975	1416	2200	1155	2200
25	18	3192	3,25	3262	1195	2584	1195	1906	1195	1228	1195	550	1195	-	-
	15	2660	2,71	4075	1222	3397	1434	2719	1434	2040	1434	1362	1434	684	1434
	12	2128	2,17	4888	1038	4210	1198	3531	1416	2853	1700	2175	1700	1497	1700
	9	1596	1,62	5700	902	5022	1020	4344	1175	3666	1384	2988	1684	2309	1700
	6	1064	1,08	6513	797	5835	888	5157	1003	4478	1152	3800	1353	3122	1638
30	18	6016	3,26	6020	888	4712	888	3403	888	2095	888	786	888	-	-
	15	5014	2,71	7634	918	6325	1066	5017	1066	3708	1066	2400	10660	1091	1066
	12	4011	2,17	9247	778	7939	898	6630	1064	5322	1303	4013	1332	2705	1332
	9	3008	1,63	10861	674	9552	763	8244	879	6935	1037	5627	1263	4319	1450
	6	2005	1,09	12474	595	11166	663	9858	749	8549	861	7241	1011	5932	1226
40	18	9354	3,27	9352	891	7307	891	5261	891	3216	891	1170	891	-	-
	15	7795	2,72	11884	920	9839	1070	7793	1070	5748	1070	3702	1070	-	-
	12	6236	2,18	14417	780	12371	901	10326	1066	8280	1200	6235	1200	1489	1200
	9	4677	1,63	16949	677	14904	767	12858	883	10813	1040	8767	1200	6722	1200
	6	3118	1,09	19481	598	17436	667	15390	753	13345	865	11299	1016	9254	1200
45	18	11832	3,26	11834	733	9204	733	6574	733	3944	733	1314	733	-	-
	15	9860	2,72	15121	754	12491	880	9861	880	7232	880	4602	880	-	-
	12	7888	2,17	18409	640	15779	739	13149	874	10519	1069	7889	1100	5259	1100
	9	5916	1,63	21697	556	19067	629	16437	724	18307	853	11177	1039	8547	1100
	6	3944	1,09	24984	491	22354	547	19724	618	17094	710	14464	833	11834	1009
50	18	17005	3,22	17689	738	13804	738	9919	738	6034	738	2149	738	-	-
	15	14171	2,68	22511	737	18626	886	14741	886	10856	886	6971	886	-	-
	12	11337	2,14	27332	629	23447	725	19563	855	15678	1000	11793	1000	7908	1000
	9	8502	1,61	32154	548	28269	620	24384	713	20499	839	16614	1000	12729	1000
	6	5668	1,07	36976	486	33091	541	29206	611	25321	701	21436	822	17551	994
55	18	24800	3,26	24791	687	19335	687	13879	687	8423	687	2967	687	-	-
	15	20666	2,72	31571	708	26115	825	20659	825	15203	825	9749	825	4292	825
	12	16533	2,17	38351	601	32895	694	27439	821	21983	850	16528	850	11072	850
	9	12400	1,63	45131	521	39675	590	34220	679	28764	801	23308	850	17852	850
	6	8267	1,09	51912	460	46456	513	41000	579	35544	666	30088	782	24632	850

5) Tü = static torque
6) Ts = dynamic torque
7) Alteration of clutch/brake torque relation possible. Dates on request.
Please consult us to determine the maximum no. of engagements.

Air supply

Rotorsize R	G ½	G ¾	G 1	G 1¼	G 1½
Partnumber	**654**	**655**	**656**	**657**	**658**
Max. speed [rpm]	2500	1400	1200	800	700
A [mm]	35,5	37,5	37,5	42,0	42,0
LM [mm]	15	15	15	22	22
LR [mm]	12	16	18	20	22
D [mm]	55	65	65	88	88
M [mm]	M 35x1,5	M 35x1,5	M 35x1,5	M 50x1,5	M 50x1,5
P^{H7} [mm]	40	40	40	60	60
L5 [mm]	115,5	123,5	125,5	149,0	151,0
Suitable for Lutex® LS-...	15-20	15-25	30-40	45-55	55

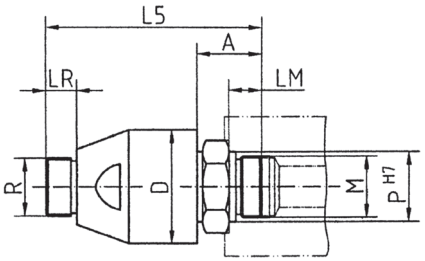

Fig. 7

Direct connection of the press safety valve or the electromagnetic valve with the rotating air supply is possible. A rotary air supply system for higher speed is available as an option.

Examples of installation

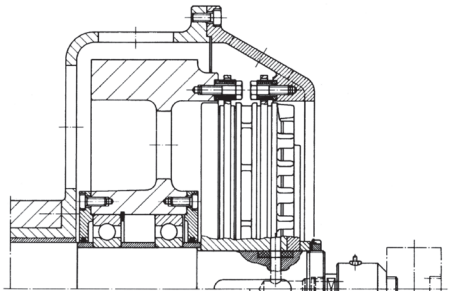

Fig. 8 LS

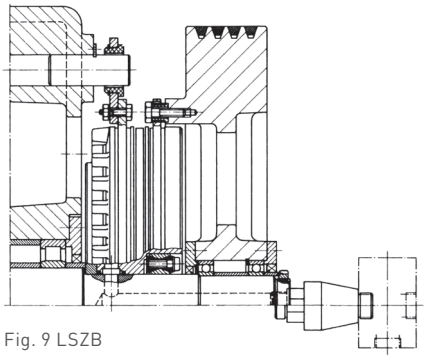

Fig. 9 LSZB

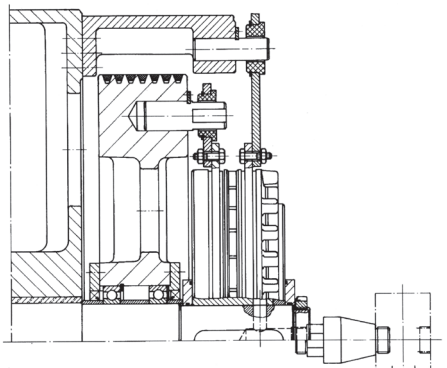

Fig. 10 LSZU

Other products for press drives

Lutex® LKB -	Pneumatically actuated clutch/brake combination with high torque at small dimensions
Lutex® HKB, HKBT -	Hydraulically actuated clutch/brake combination: separate clutch - separate brake
DESCH Complete Press Drive KA -	Complete press drives. (either hydraulically or pneumatically operated) together with planetary gearbox and flywheel
DESCH Complete Press Drive KAS -	Complete press drives with hydraulically actuated clutch and brake, with planetary gearbox, flywheel and additionally with an engageable gear step
DESCH Complete Press Drive KAE -	Complete press drives with planetary gearbox, pneumatically or hydraulically actuated clutch/brake cobination and a flywheel. KAE with integrated torque motor inside of the flywheel
DESCH Servox® type series -	One- or two-stage planetary gearbox with hydraulically released brake and with adaptor for common torque motors, also available with spur gear for up to 4 motors
Further components -	Quick exhaust module, crankshafts, flywheels, pulleys, hydraulic power units and accessories

Customised solutions on request!

SMART DRIVE SOLUTIONS

CONTACT

DESCH Canada Ltd.
240 Shearson Crescent
Cambridge
Ontario
Canada N1T 1J6
T +1800 2631866
+1519 6214560
F +1519 6231169
desch.canada@desch.com

DESCH USA LP
Manufacturing,
Assembly
4940 Merrifield Pkwy
Dallas, Texas
75236
T +1 330 937 9030
F +1 330 937 9031
desch.dallas@desch.com

DESCH USA LP
Sales, Engineering,
Service Support
3700 Embassy Pkwy,
Suite 530 Akron Ohio
44333
T +1 330 937 9030
F +1 330 937 9031
sales.usa@desch.com

Technical changes reserved · © DESCH North America GmbH & Co. KG ·