SMART DRIVE SOLUTIONS

DESCH COMPLETE PRESS DRIVE KA

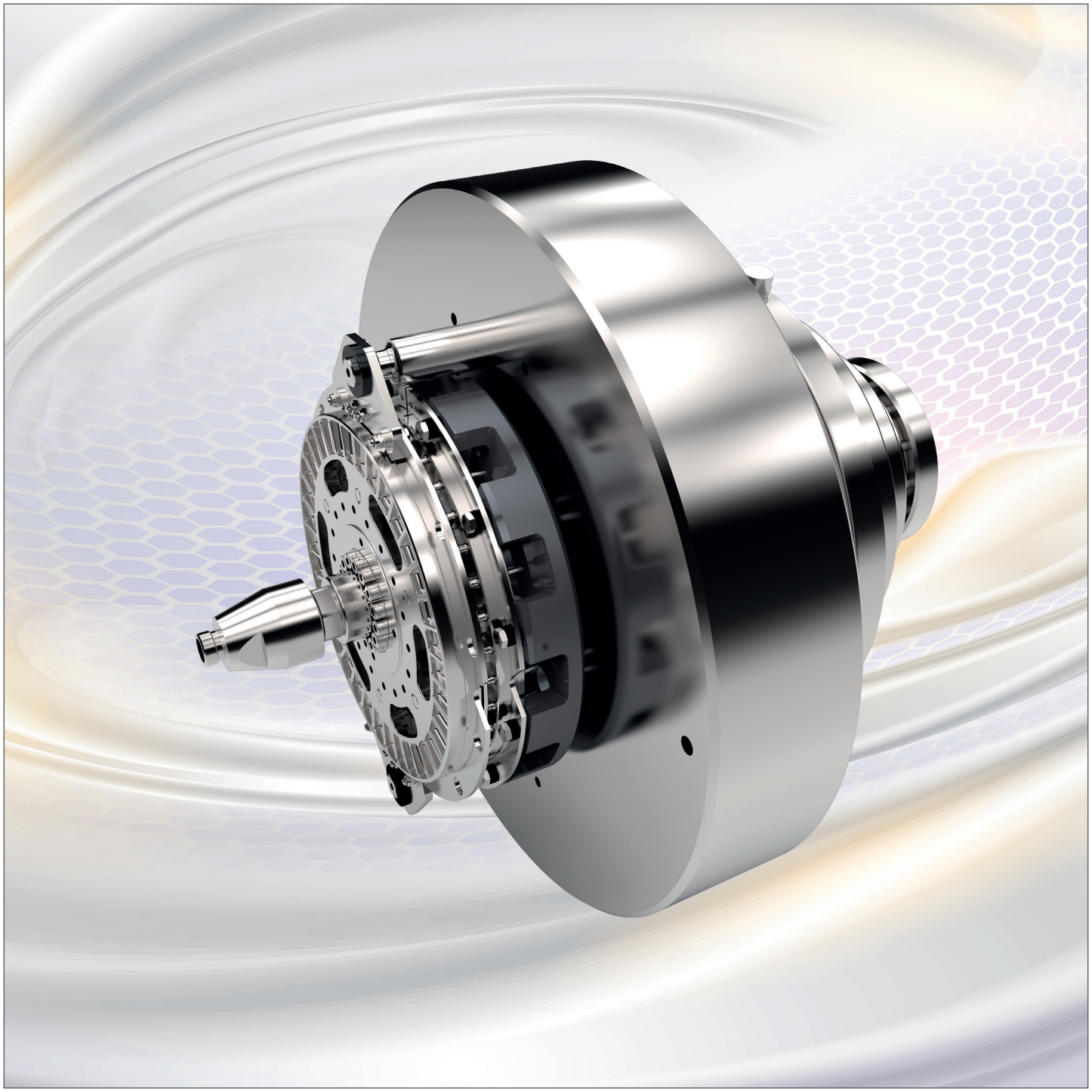

DESCH standard complete press drive KA

Over 30 years of experience

Over this period of time DESCH has built more than 2.500 complete drive units with a torque range from 1.6 kNm to 1600 kNm.

Application areas

The KA replaces the entire spur gear transmission or one transmission stage on automatic punching machines, eccentric presses and knuckle joint presses or similar machines where the power required by the machine is taken from a fast moving flywheel. The DESCH standard complete drives cover a torque range of 16 kNm to 160 kNm with gear ratios 4 and 6. The unit which is ready to be installed consists of a single stage high performance planetary gear, a flywheel as power accumulator as well as a pneumatically or hydraulically actuated clutch/brake combination.

Benefits of the complete press drive KA

- Compact prefinished unit which considerably reduces assembly time and costs without any additional costs for design and manufacture.
- Extremely low moment of inertia, which means
  - very small braking angle = high level of operational safety
  - high stroke frequencies = increased productivity
  - less wear
  - lower energy costs
- High working capacity at a low number of revolutions
- Easy to maintain and a high level of available spare parts on stock
- Short delivery times as a result of standardised components
- Design test certificate issued by the liability association
- Environmentally friendly! Low noise level
- The press frame can be designed smaller, without any reduction in working capacity of the machine, which means it can be produced at a considerably lower price

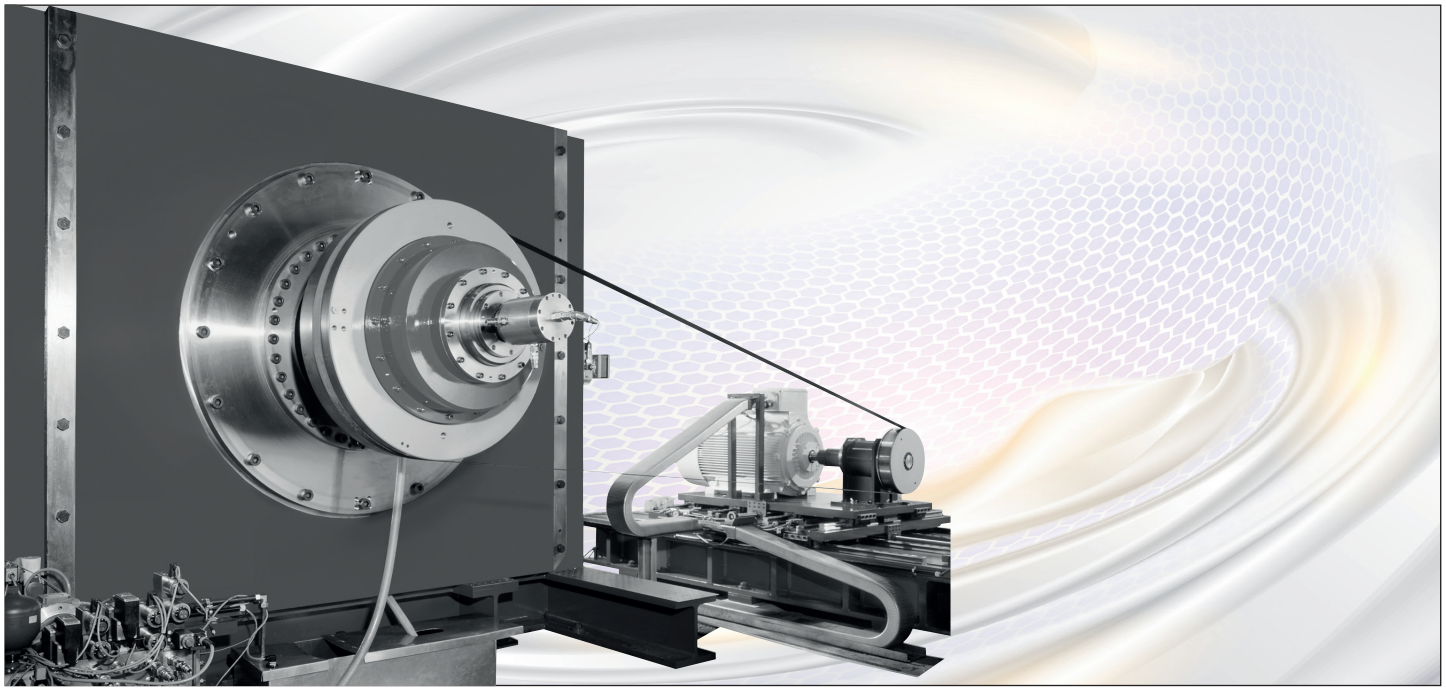

DESCH test rig for complete drives

All in one hand

DESCH know-how

DESCH offers you extensive product know how, starting with planning work right up to the final test run on our modern test rig.

DESCH flywheel module

The flywheel runs on a hub which transfers weight and running forces directly to the machine stand. Careful dimensioning of the roller bearing guarantees long service life of the flywheel bearings. Various diameters of flywheels are available for optimum adjustment to your machine.

DESCH Lutex® clutch/brake combination LKB

For decades now the pneumatically actuated DESCH Lutex®-LKB has been successfully used in press drives thousands of times all over the world. The allocation of clutch size is based on an air pressure level of 5.5 bar. The LKB complies with the valid safety regulations.

DESCH Lutex® clutch/brake combination HKB

The hydraulically engaged DESCH Lutex®-HKB has successfully been used for decades in presses, punching machines, shears ore similar machines.The drive is dimensioned by DESCH to determine the need of pressure, lubrication and cooling oil for your application. Planetary gearbox and HKB are sealed against another and have to be supplied with different oil qualities (installation example see page 6). Special executions for common oil circuit on request.

DESCH high performance planetary gear

For over 60 years DESCH has been building planetary gears. In 1984 we were the first to integrate planetary gears into press drives. Since then, they have become a more permanent and tried and tested component of modern press technology. Due to the power distribution to several gears a high torque can be transfered under tight spatial conditions. The moved masses are much smaller in comparison to conventional spur gear reducers. This considerable physical advantage allows essentially shorter brake angles or a considerably more favourable energy balance under a high switching frequency. From the output side the torque is transmitted via a tooth coupling which is attached to the driven shaft by means of a shrink disc. Different hub shaft connections on request. The gear unit has to be equipped with an oil circulation lubrication system.

Technical data

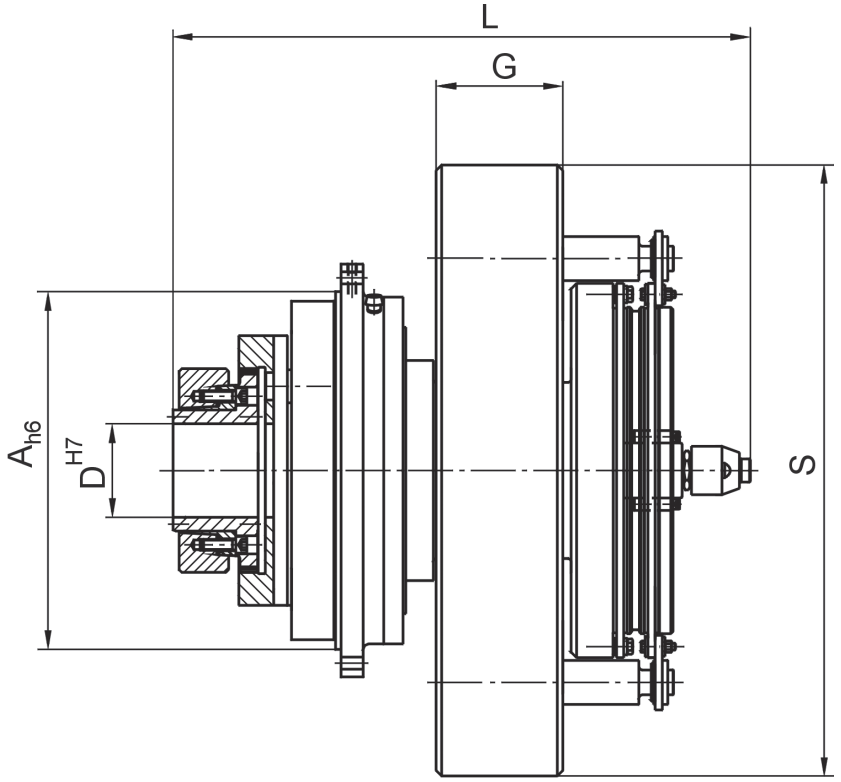

Standard complete press drive with LKB

KA	T_{ab} Nm	A h6	D H7	G mm	L ~ i=4 i=6 mm	Primary flywheel diameter S with allocated moment of inertia J									
						S mm	J kgm²	S mm	J kgm²	S mm	J kgm²	S mm	J kgm²	S mm	J kgm²
16	16 000	430	120	180	783 763	780	50	995	135	1120	217	1210	297	1280	372
25	25 000	510	130	200	837 822	800	62	1015	162	1150	268	1250	375	1330	481
40	40 000	580	150	220	993 917	905	111	1065	215	1175	320	1260	424	1330	528
63	63 000	650	170	230	1107 1093	1060	218	1250	427	1380	637	1480	845	1565	1058
100	100 000	730	190	270	1217 1197	1205	431	1355	694	1465	951	1555	1209	1635	1479
160	160 000	820	220	300	1337 1314	1180	431	1325	696	1430	950	1520	1217	1595	1479

An oil circulation lubrication system must be provided for the gearbox. CLP gear oil (DIN 51517 T.3) according to ISO-VG 100 (DIN 51519 T.2) is to be used.
Oil quantity in accordance to the calculation of DESCH. Complete press drives with differing performance characteristics upon request.

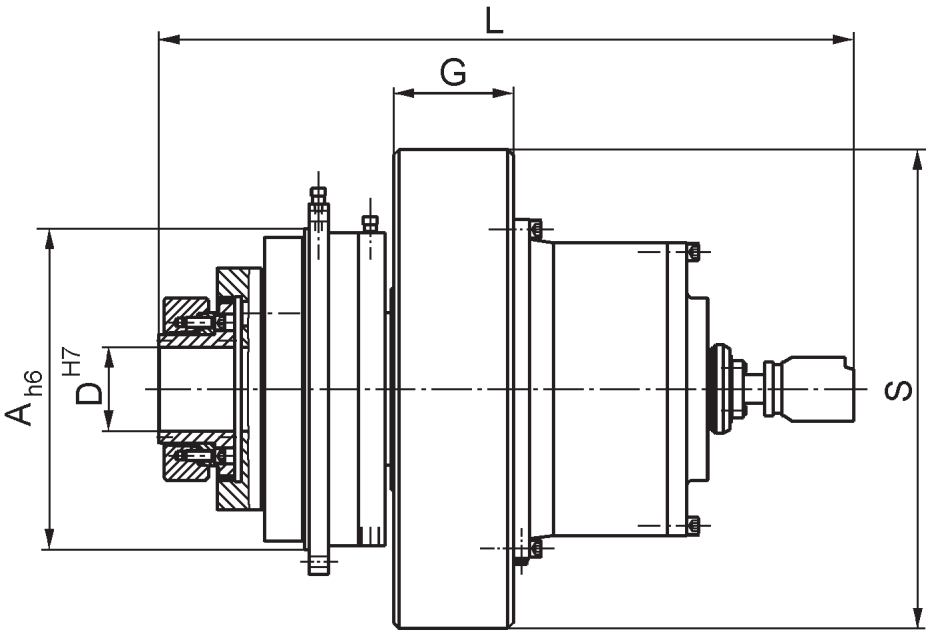

Standard complete press drive with HKB

KA	T_{ab} Nm	A h6	D H7	G mm	L ~ i=4 i=6 mm	Primary flywheel diameter S with allocated moment of inertia J									
						S mm	J kgm²	S mm	J kgm²	S mm	J kgm²	S mm	J kgm²	S mm	J kgm²
16	16 000	430	120	180	940 925	780	50	995	135	1120	217	1210	297	1280	372
25	25 000	510	130	200	1000 980	800	62	1015	162	1150	268	1250	375	1330	481
40	40 000	580	150	220	1095 1074	880	111	1065	215	1175	320	1260	424	1330	528
63	63 000	650	170	230	1315 1291	1060	218	1250	427	1380	637	1480	845	1565	1058
100	100 000	730	190	270	1437 1405	1205	431	1355	694	1465	951	1555	1209	1635	1479
160	160 000	820	220	300	1540 1508	1180	431	1325	696	1430	950	1520	1217	1595	1479

An oil circulation lubrication system must be provided for the gearbox. CLP gear oil (DIN 51517 T.3) according to ISO-VG 100 (DIN 51519 T.2) is to be used.
Oil quality and quantity for the CLP combined unit according to technical calculation of DESCH.
Complete press drives with differing performance characteristics upon request.

Installation Examples

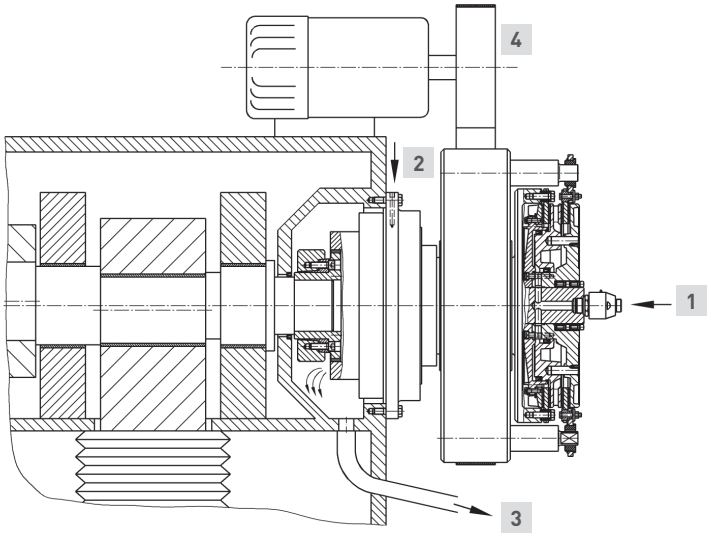

Installation example with DESCH Lutex® LKB

1 Compressed air for clutch

2 Input lubrication oil gearbox

3 Output lubrication oil gearbox

4 Belt execution depends on speed of belt and should be located in the center of the flywheel

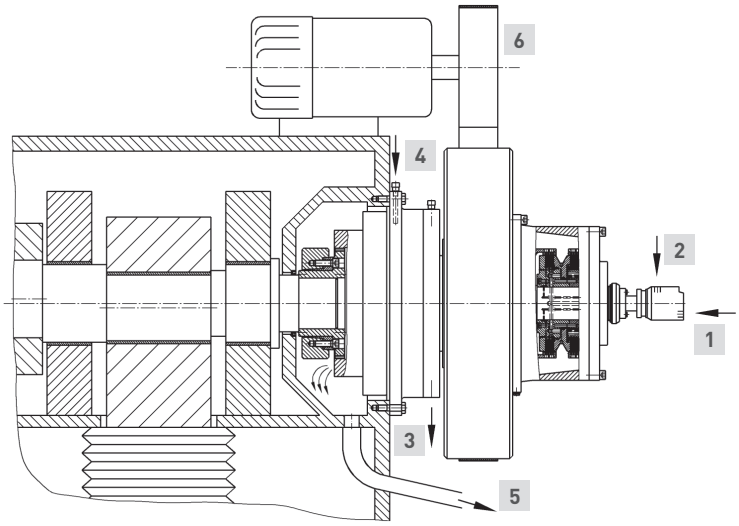

Installation example with DESCH Lutex® HKB

1 Pressure oil for clutch

2 Input cooling oil clutch

3 Output cooling oil clutch

4 Input lubrication oil gearbox

5 Output lubrication oil gearbox

6 Belt execution depends on speed of belt and should be located in the center of the flywheel

Other products for press drives

Lutex® LKB, LS -	Pneumatically actuated clutch/brake combination with high torque at small dimensions
Lutex® HKB, HKBT -	Hydraulically actuated clutch/brake combination: separate clutch - separate brake
DESCH Complete Press Drive KAS -	Complete press drives with hydraulically actuated clutch and brake, with planetary gearbox, flywheel and additionally with an engageable gear step
DESCH Complete Press Drive KAE -	Complete press drives with planetary gearbox, pneumatically or hydraulically actuated clutch/brake cobination and a flywheel. KAE with integrated torque motor inside of the flywheel
DESCH Servox® type series -	One- or two-stage planetary gearbox with hydraulically released brake and with adaptor for common torque motors, also available with spur gear for up to 4 motors
Further components -	Quick exhaust module, crankshafts, flywheels, pulleys, hydraulic power units and accessories

Customised solutions on request!

DESCH
SMART DRIVE SOLUTIONS

Questionnaire to fax +492932 300 811

Complete drive selection

Please give us the necessary information from the questionnaire to prepare an offer. We can specify the driving torque, the gear ratio, the size of the flywheel and the type of clutch.

Questionnaire for determination of complete press drives KA

Customer: _____ City code, city: _____

Name: _____ Telephone: _____

Department: _____ Fax: _____

Street: _____ E-Mail: _____

Kind of machine: _____

Working conditions : ☐ Permanent stroke ☐ Single stroke

Data of the machine:						
Max. press force			F	=		kN
Required working hight			a	=		mm
Angle before bottom dead centre			α	=		°
Crank radius			r	=		mm
Length of connection rod			L	=		mm
Max. speed of crank shaft			n_E	=		rpm
Max. speed of eccenter shaft at single stroke oper.						
Inching speed	n_{EE} =		max. no. of engagements z	=		epm
Working speed	n_{EA} =		max. no. of engagements z	=		epm
Speed of clutch shaft			n_K	=		rpm
Output speed of KA			n_{AB}	=		rpm
Mass moment of inertia of the machine reduced to the output shaft of the KA			J_{fr}	=		kgm^2
Required brake angular			γ	=		°
Reaction time of valve + electr. system			$t_{st}+t_v$	=		s

Data for flywheel determination				
Required working capacity	W_{max}	=		kJ
At minimum speed of eccenter shaft	n_E	=		rpm
At max. loss of speed of	i_{nE}	=		%
Position of motor pulley to flywheel (e.g. position at 2 o'clock = 60°)	β	=		°
Belt force	F_R	=		kN

The belt should run centrally arranged on the flywheel. In case of a deviation the exact belt position has to be notified.

Additional Data

_____

_____

_____

SMART DRIVE SOLUTIONS

CONTACT

DESCH Canada Ltd.
240 Shearson Crescent
Cambridge
Ontario
Canada N1T 1J6
T +1800 2631866
+1519 6214560
F +1519 6231169
desch.canada@desch.com

DESCH USA LP
Manufacturing,
Assembly
4940 Merrifield Pkwy
Dallas, Texas
75236
T +1 330 937 9030
F +1 330 937 9031
desch.dallas@desch.com

DESCH USA LP
Sales, Engineering,
Service Support
3700 Embassy Pkwy,
Suite 530 Akron Ohio
44333
T +1 330 937 9030
F +1 330 937 9031
sales.usa@desch.com

Technical changes reserved · © DESCH North America GmbH & Co. KG ·