SMART DRIVE SOLUTIONS

DESCH Lutex® CLUTCH/BRAKE COMBINATION

Type HKB and HKBT- hydraulically actuated

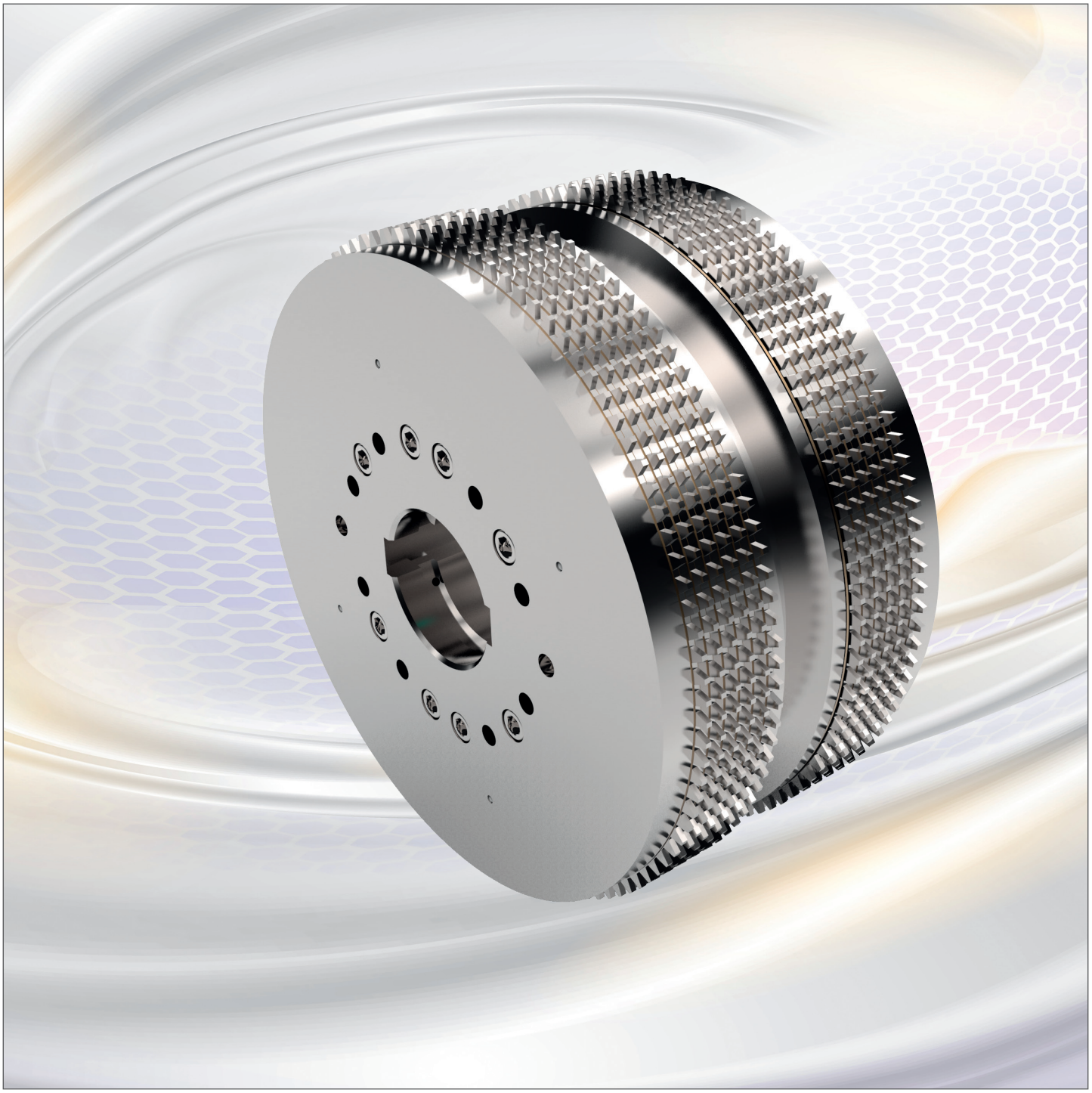

Description

The hydraulically actuated Lutex® HKB is a wet-type, multiple plate clutch/brake combination. When the HKB is not subjected to oil pressure, the brake is engaged by the pretensioned springs. When the hydraulic oil is fed into the cylinder, the piston overcomes the spring force and is pressed against the plate package of the clutch. The platepackage of the brake opens and the clutch engages. An overlap of clutch and brake functions is impossible.

HKB's are used especially in intermittently operating machines like presses, shearing machines, folding presses and similar ones. The use of a HKB is an investment into the future because of the nearly abrasion free operation, the low environmetal hurt factor, the compact design at high torque ratings and at high operating frequency low power consumption as well.
The Lutex® HKB conforms to the safety requirements of the "employers' liability insurance association".

Standard toothed rings

Four standard designs (see Fig. 3) are available for each size, thus offering several installation possibilities. Each design can be used for the clutch or the brake. The connection bores for designs 1 to 3 are made to customer specifications.

Inner clutch

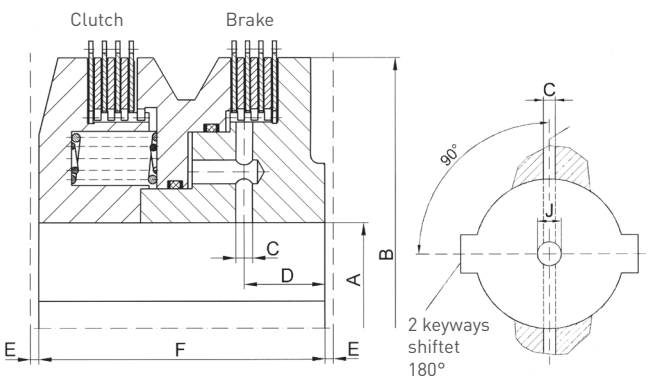

Fig. 1

Designating example

The clutch torque and the designs of the clutch and brake toothed rings are designated in the number key.

Example:

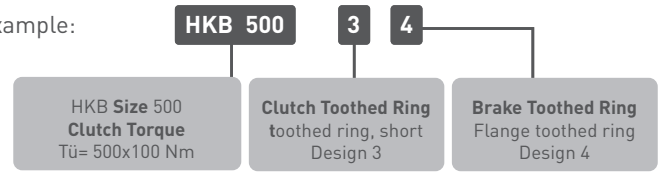

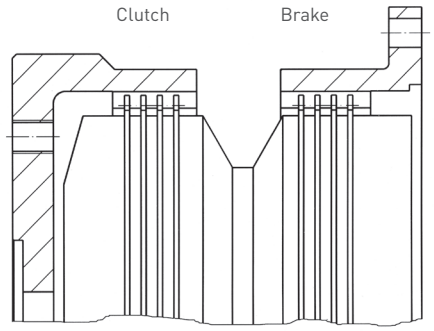

Fig. 2

Installation hints

Prior to installation we recommend that DESCH experts determine the selection of

- the necessary torques of clutch and brake
- the thermal load and the frequency of operations
- the necessary quantity of cooling oil
- the necessary hydraulic unit (optional)

The operation pressure is 60 bar. Installation is only possible in horizontal position. The bore of the HKB is made according to DIN 6885 with two keyways shifted 180° to each other (special keyways optional). Two bores for pressure oil inlet shifted 90° to keyways. Application of clamping elements (as an option).

HKB Size	Torques		Max. Speed 4) min^{-1}	Cylinder-volume cm^3	I inside kgm^2	Weight Inside Clutch kg	Dimensions in mm							
	Clutch Tü 1) 3) Nm	Brake Ts 1) 3) Nm					A		B	C	D	E	F	J
							min.	max.						
32	3 150	1 060	1700	8	0,08	17,5	45	80	196	6	31	5	110	8,5
50	5 000	1 560	1700	12	0,10	21	45	80	196	6	31	5	126,5	8,5
63	6 300	2 120	1300	13	0,28	36	60	100	254	8	36	5	135	12
100	10 000	3 120	1300	19	0,33	44	60	100	254	8	36	5	156	12
125	12 500	4 250	1000	21	0,90	74	75	125	320	10	48	5	170	14
200	20 000	6 250	1000	31	1,10	90	75	125	320	10	48	5	196	14
250	25 000	8 500	850	40	2,50	130	95	160	394	12	60	5	205	18
400	40 000	12 500	850	60	3,00	154	95	160	394	12	60	5	237	18
500	50 000	17 000	680	73	7,20	250	120	200	496	15	65	5	230	22
800	80 000	25 000	680	110	8,50	303	120	200	496	15	65	5	266	22
1000	100 000	30 000	540	122	25	503	150	250	630	20	85	5	265	30
1450	145 000	44 000	540	186	30	633	150	250	630	20	120	5	330	30
2000	200 000	63 000	440	320	82	1170	180	310	780	24	103	5	370	34
3200	320 000	100 000	440	450	98	1420	180	310	780	24	103	5	460	34

1) Tü = static torque at 60 bar 2) Ts = dynamic torque 3) Alteration for clutch/brake torque relation possible by manufacturer 4) Not permitted for operation with single strokes

Standard toothed rings - optionally for clutch or brake

Fig. 3

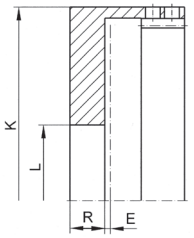

Design 1 - Toothed ring, long

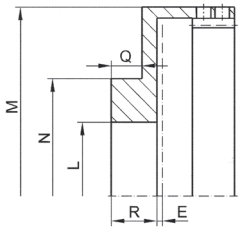

Design 2 - Hub toothed ring

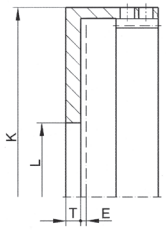

Design 3 - Toothed ring, short

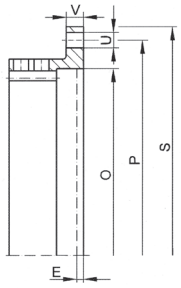

Design 4 - Flange toothed ring

HKB Size	Weight and mass moment of inertia I outside								Dimensions of toothed rings in mm												
	Design 1		Design 2		Design 3		Design 4		E	K	L	M	N	O	P	Q	R	S	T	U	V
	kg	kgm²	kg	kgm²	kg	kgm²	kg	kgm²		f 7	min.		f 7	H 7				f 7			
32	11	0,107	6,7	0,065	6,2	0,067	3,6	0,05	5	230	80	230	160	215	245	26	35	260	16	9	11
50	11	0,115	7,0	0,072	6,7	0,075	4,2	0,06	5	230	80	230	160	215	245	26	35	260	16	9	11
63	20	0,310	12,3	0,20	11	0,19	6,1	0,15	5	290	80	290	200	275	310	28	40	330	18	11	12
100	21	0,340	13	0,22	12	0,22	7,2	0,18	5	290	80	290	200	275	310	28	40	330	18	11	12
125	42	1,120	29	0,80	24	0,72	12,6	0,50	5	380	100	365	250	350	400	30	45	425	20	14	16
200	44	1,210	31	0,90	26	0,81	14,6	0,60	5	380	100	365	250	350	400	30	45	425	20	14	16
250	62	2,3	46	1,70	35	1,44	20,3	1,18	5	440	130	440	340	415	470	32	55	500	25	18	20
400	65	2,5	49	1,90	38	1,68	24	1,44	5	440	130	440	340	415	470	32	55	500	25	18	20
500	118	7,1	80	4,90	67	4,6	36	3,50	5	560	165	560	400	530	590	40	65	630	30	22	25
800	124	7,9	86	5,70	73	5,3	42	4,30	5	560	165	560	400	530	590	40	65	630	30	22	25
1000	194	18,4	146	14	130	14	68	10,8	5	700	200	700	500	670	750	45	80	800	40	30	30
1450	207	21	160	17	144	17	80	13,4	5	700	200	700	500	670	750	45	80	800	40	30	30
2000	432	64	304	45	261	43	146	35	5	870	250	870	640	830	930	60	100	990	50	33	40
3200	462	72	333	53	291	52	174	43	5	870	250	870	640	830	930	60	100	990	50	33	40

Clutch housing - for standard toothed rings

Fig. 4

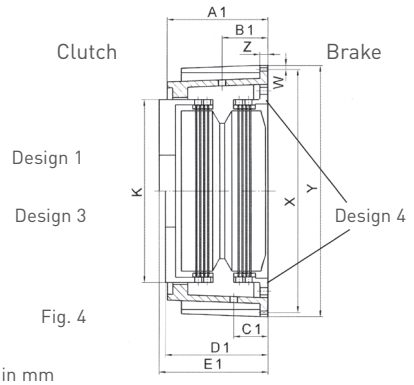

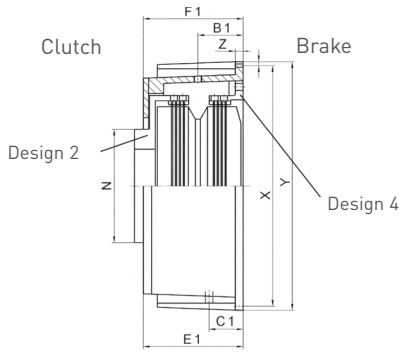

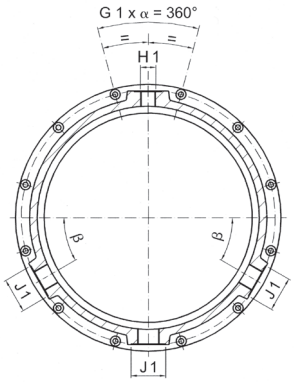

Dimensions in mm

HKB Size	K f 7	N f 7	W	X	Y f 7	Z	A1	B1	C1	D1	E1	F1	H1	J1	G1 x α°		β°
32	230	160	9	305	325	11	117	60	40	136	155	147	G ¾	G ¾	8	45	40
50	230	160	9	305	325	11	137,5	70	40	152,5	171,5	163,5	G ¾	G ¾	8	45	40
63	290	200	11	385	410	11	140	75	50	163	185	177	G ¾	G 1	8	45	40
100	290	200	11	385	410	11	161	80	50	184	206	198	G ¾	G 1	8	45	40
125	380	250	11	480	505	14	180	90	60	200	225	217	G 1	G 1 ¼	8	45	40
200	380	250	11	480	505	14	206	105	60	226	251	243	G 1	G 1 ¼	8	45	40
250	440	340	11	555	580	15	205	105	70	240	270	261	G 1	G 1 ½	12	30	30
400	440	340	11	555	580	15	244	125	70	272	302	293	G 1	G 1 ½	12	30	30
500	560	400	11	685	710	16	255	120	80	270	305	295	G 1	G 1 ½	12	30	30
800	560	400	11	685	710	16	290	140	80	306	341	331	G 1	G 1 ½	12	30	30
1000	700	500	14	870	900	20	299	138	110	315	355	345	G 1	G 2	12	30	30
1450	700	500	14	870	900	20	364	170	110	380	420	410	G 1	G 2	12	30	30
2000	870	640	18	1070	1110	25	440	180	110	430	480	465	G 1 ½	G 2 ½	20	18	36
3200	870	640	18	1070	1110	25	530	220	110	520	570	555	G 1 ½	G 2 ½	20	18	36

Lutex® clutch/brake combination
Type HKBT

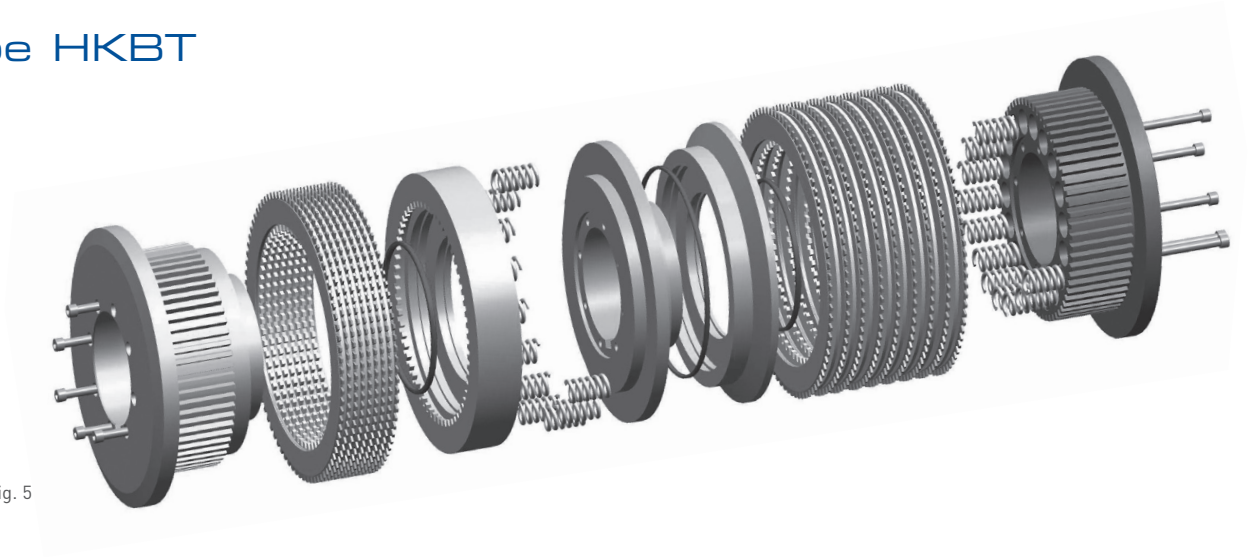

Fig. 5

Description

The Lutex® clutch series HKBT consits of a separate clutch and a separate brake. This type was designed for special requirements of engagement. The HKBT series is based on the standard HKB series and is executed with pressure springs and friction discs according to customer requirements. The HKBT series is transmitting clutch torques in the range of 3 to 500 kNm. The design of the brake allows the usage of more pressure springs and therefore an increase of the brake torque up to 50%. Clutch and brake can be controlled by one or two pressure lines.

Controlling the HKBT with one pressure line

When one pressure line is used clutch and brake piston are forced by the same pressure. The relation of the spring quantities is responsible for the engagement behaviour of the system. If the spring force is greater on the brake, in a certain pressure range there will be an overlapping of the torques of clutch and brake at the same time. This is advantageous to avoid a falling down of the press slide during the inching mode. If the spring force is greater on the clutch the opposite effect appears. In a certain pressure range no clutch and brake torque is engaged. This can be useful if a running-in idle is required e. g. for a creep speed drive.

Controlling the HKBT with two pressure lines

Clutch and brake are driven separately. This allows an engaging with a defined overlapping of clutch and brake torque or in the opposite way an idle run of the HKBT. The high dynamic proportional valves control the HKBT in a very sensitive way. The flexibility of the pressure control allows to use a clutch with low pressure force and high clutch torque or to use a brake with max. spring force and maximum brake torque. The full potential of the HKBT can be used.

The required multi-channel rotating unions to supply the HKBT with pressure and cooling oil also belong to the scope of supply of DESCH.

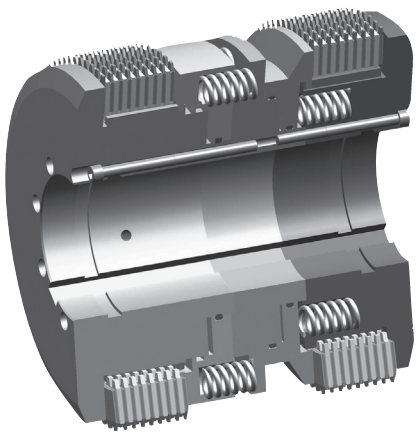

Fig. 6
Lutex® Clutch/Brake Combination
Type HKBT

Benefits of the clutch/brake combination

- Very low maintenance, safe and reliable
- Low mass moment of inertia
- Great max. bore diameter
- Shortest engagement times
- Separate controlling of clutch and brake allows the most flexible way to handle the clutch, overlapping of clutch and brake torque or idle run is possible.
- Sinter bronze friction discs with very high durability
- Controlling of clutch and brake by one or two pressure lines

Rotary unions for pressure oil feed

for axial and radial outlet

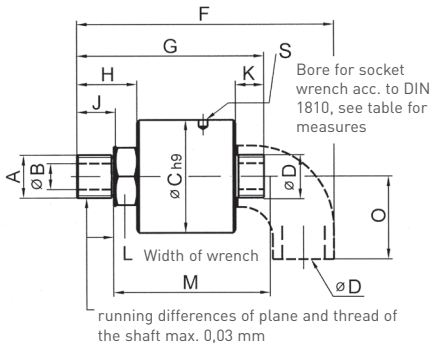

Fig. 7

installation into shaft

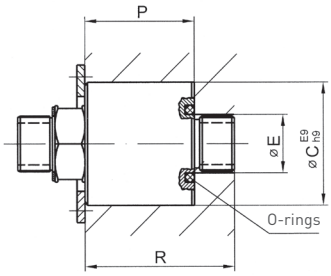

A RH	B	C E9/h9	D RH	E	F	G	H	J	K	L	M	O	P - 0,25	R	S
G 3/8	9,5	42	G	18	119	93	26	16	12	19	93	25	54,5	67	4
G ½	12,7	55	G ½	22	138	109	34	19	14	24	107	28	60,5	75	6
G ¾	17,5	63	G ¾	28	158	122	34	19	16	30	124	33	71,5	88	6

Operating data

max. oil pressure 60 bar
max. temperature 120°C
max. speed 1500 rpm

Type 1 without angle piece
Type 2 with angle piece
Type 3 with O-ring
Type 4 with O-ring and angle piece

Recommendation for installation

Clamp flexible hoseline or elbow fitting piece into the bench vice and fasten the oil press inlet by means of the socket wrench, than screw the oil press inlet into shaft.
2- and 3-chanel oil feed on request.

Examples of installation

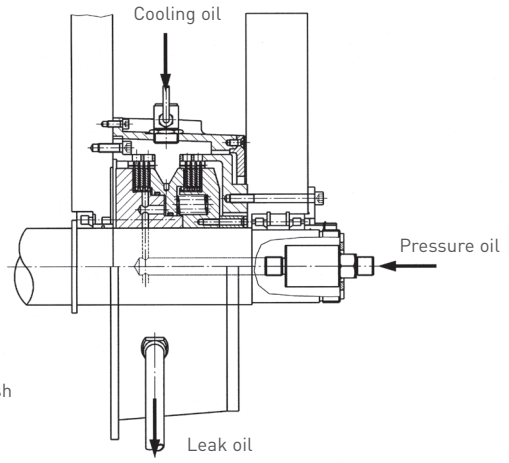

Fig. 8
HKB with splash lubrication

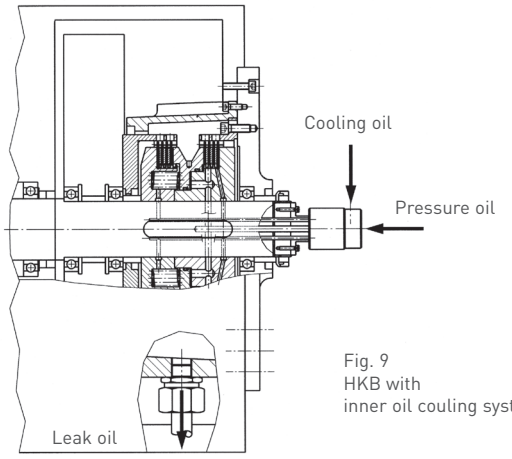

Fig. 9
HKB with inner oil couling system

Other products for press drives

Lutex® LKB, LS -	Pneumatically actuated clutch/brake combination with high torque at small dimensions
DESCH Complete Press Drive KA -	Complete press drives. (either hydraulically or pneumatically operated) together with planetary gearbox and flywheel
DESCH Complete Press Drive KAS -	Complete press drives with hydraulically actuated clutch and brake, with planetary gearbox, flywheel and additionally with an engageable gear step
DESCH Complete Press Drive KAE -	Complete press drives with planetary gearbox, pneumatically or hydraulically actuated clutch/brake cobination and a flywheel. KAE with integrated torque motor inside of the flywheel
DESCH Servox® type series -	one- or two-stage planetary gearbox with hydraulically released brake and with adaptor for common torque motors, also available with spur gear for up to 4 motors
Further components -	Quick exhaust module, crankshafts, flywheels, pulleys, hydraulic power units and accessories

Customised solutions on request!

SMART DRIVE SOLUTIONS

CONTACT

DESCH Canada Ltd.
240 Shearson Crescent
Cambridge
Ontario
Canada N1T 1J6
T +1800 2631866
+1519 6214560
F +1519 6231169
desch.canada@desch.com

DESCH USA LP
Manufacturing,
Assembly
4940 Merrifield Pkwy
Dallas, Texas
75236
T +1 330 937 9030
F +1 330 937 9031
desch.dallas@desch.com

DESCH USA LP
Sales, Engineering,
Service Support
3700 Embassy Pkwy,
Suite 530 Akron Ohio
44333
T +1 330 937 9030
F +1 330 937 9031
sales.usa@desch.com

Technical changes reserved · © DESCH North America GmbH & Co. KG ·