SMART DRIVE SOLUTIONS

DESCH SYSTEM SOLUTIONS FOR MARINE DRIVES

DESCH products for marine applications

Gear boxes

Switchable membrane clutches
for pumps

Switchable clutches
for SAE motors

Our company has been a long standing supplier of drive solutions for the marine industry. Extreme operating conditions demand for high-quality, reliable products and services, which we can provide due to our profound know-how.

With production facilities in Germany, Canada, China and Brazil DESCH is able to offer you discerning world-wide service. Many customers in the marine industry put their trust in drive train components made by DESCH. We offer a variety of products and solutions for tug boats, fire-fighting vessels dredgers and more with high customer satisfaction.

To ensure DESCH's highest quality of standards, we continue to work together with various organizations to produce and safeguard quality, such as ABS, DNV-GL, Bureau Veritas, Lloyds Register, China Classification Society etc. Furthermore, our DESCH service center sets itself apart with an excellent team of technicians and fitters ready to provide you with expert hands-on maintenance work, machine care and repairs.

Wet-running multi-disc clutches Lutex® HK and HK-E

Series Lutex® HK

Series Lutex® HK-E

Field of application

Designed for marine drive systems, hydraulically actuated multi-plate clutches are installed where high torques need to be transmitted reliably in a small space.

The oil-cooled discs with the friction pairing steel/sintered bronze are practically wear-free.

Any wear that occurs is compensated by the piston stroke, so there is no need to adjust the clutch.

Lutex® HK series

- For achieving the highest torques in a compact installation space.
- 100% compatible with known clutch solutions

Lutex® HK-E series

- For achieving the highest torques at increased speeds and large shaft diameters. Alternatively, it is possible to select a smaller clutch size if the diameter of the bore was used to determine the size so far. Performance data is identical to standard series.

Benefits of Lutex® HK series

- Extremely favourable torque to mass ratio
- Low moment of inertia
- High level of thermal stability
- Long service life and low maintenance requirements
- Engages backlash-free thanks to infinite control of the torque via the shift pressure
- Sprung inner plates for defined disengagement when switching off, minimum residual torque when idling
- Emergency mechanical shift mechanism should the hydraulic oil supply fail in accordance with class specifications

Technical data Lutex® HK

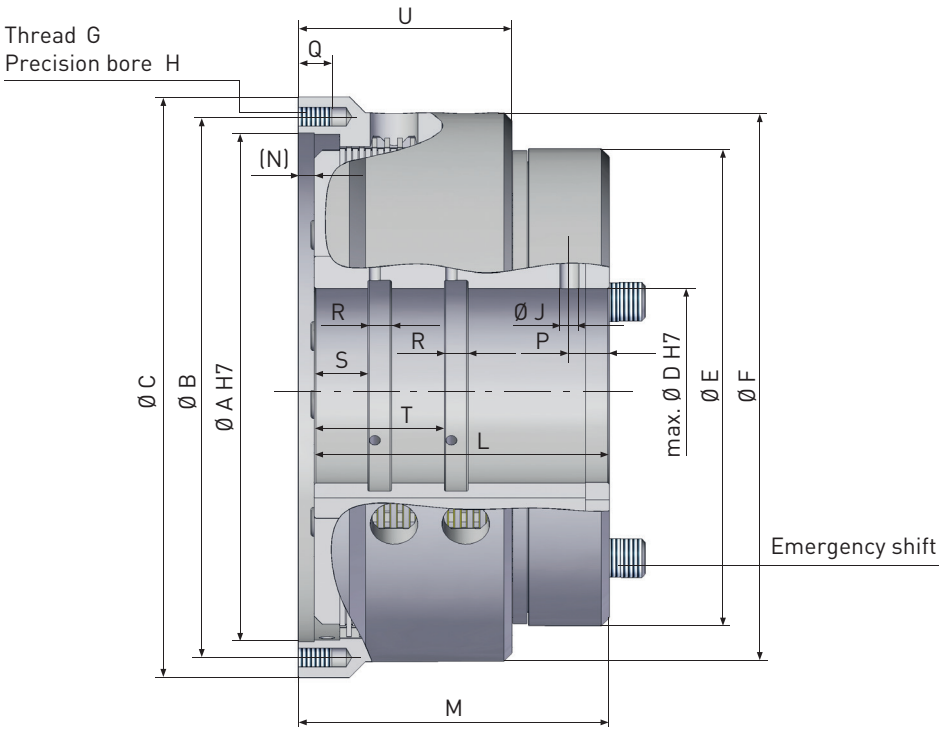

Version for high torques

Size			HK 250	HK 280	HK 310	HK 345	HK 395	HK 430	HK 485	HK 530	HK 585
Torque	T dyn.	Nm	8.000	11.200	16.000	22.500	32.000	45.000	63.000	90.000	125.000
	T stat.	Nm	12.000	16.800	24.000	33.750	48.000	67.500	94.500	135.000	187.500
Permissible operating pressure	p	bar	25								
Operating speed	n max.	rpm	2.600	2.400	2.300	2.000	1.700	1.550	1.400	1.200	1000
Mass	m	kg	40	55	75	94	137	180	257	360	460
Diameters	A H7	mm	235	260	290	320	370	405	455	500	550
	B	mm	250	280	310	340	390	430	480	530	585
	C	mm	270	300	330	365	415	455	505	560	620
	D max. H7	mm	90	100	115	125	150	165	190	210	235
	E	mm	217	240	270	300	340	380	428	472	526
	F	mm	250	280	310	345	395	430	485	530	585
	G	mm	12 x M10	12 x M10	12 x M12	12 x M14	18 x M12	18 x M14	18 x M16	18 x M20	18 x M24
	H	mm	12 x 10	12 x 12	12 x 12	12 x 16	12 x 16	12 x 16	16 x 16	16 x 20	16 x 24
	J	mm	8	8	10	12	12	14	16	17	18
Lenghts	L	mm	145	155	170	185	210	235	265	290	320
	M	mm	155	165	180	195	220	245	275	300	330
	N	mm	10								
	P	mm	17	19	23	25	27	32	36	42	46
	Q	mm	18	18	20	25	25	25	25	30	36
	R	mm	12	12	12	15	15	20	20	20	20
	S	mm	26	29	32	35	40	43	50	62	68
	T	mm	66	72	78	84	96	105	122	140	154
	U	mm	112	117	125	134	152	166	190	210	225

Technical data Lutex® HK-E

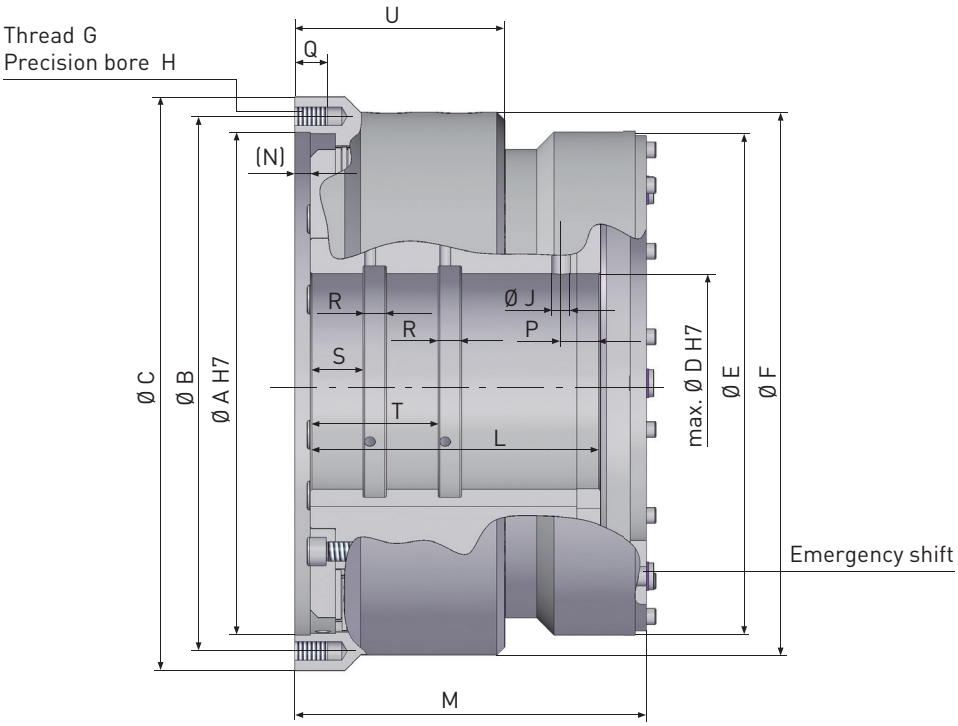

Version for high torques in conjunction with large bore diameter and increased operating speed

Size			HK 280 E	HK 310 E	HK 345 E	HK 395 E	HK 430 E	HK 485 E	HK 530 E	HK 585 E
Torque	T dyn.	Nm	11.200	16.000	22.500	32.000	45.000	63.000	90.000	125 000
	T stat.	Nm	16.800	24.000	33.750	48.000	67.500	94.500	135.000	187.000
Permissible operating pressure	p	bar	25							
Operating speed	n max.	rpm	2.650	2.550	2.200	1.850	1.700	1.550	1.300	1.100
Mass	m	kg	58	79	99	145	190	271	380	485
Diameters	A H7	mm	260	290	320	370	405	455	500	550
	B	mm	280	310	340	390	430	480	530	585
	C	mm	300	330	365	415	455	505	560	620
	D max. H7	mm	110	125	140	165	180	210	235	260
	E **	mm	255	286	320	360	400	445	500	555
	F	mm	280	310	345	395	430	485	530	585
	G	mm	12 x M10	12 x M12	12 x M14	18 x M12	18 x M14	18 x M16	18 x M20	18 x M24
	H	mm	12 x 12	12 x 12	12 x 16	12 x 16	12 x 16	16 x 16	16 x 20	16 x 24
	J	mm	8	10	12	12	14	16	17	18
Lengths	L	mm	155	170	185	210	235	265	290	325
	M	mm	190	205	225	250	280	315	340	380
	N	mm	10							
	P	mm	20	25	27	29	34	39	45	49
	Q	mm	18	20	25	25	25	25	30	36
	R	mm	12	12	15	15	20	20	20	20
	S	mm	29	32	35	40	43	50	62	68
	T	mm	72	78	84	96	105	122	140	154
	U	mm	117	125	134	152	168	190	210	225

** Diameter greater than the inner diameter of the ring gear. Observe installation specifications!

Ship hybrid module Revox® HE

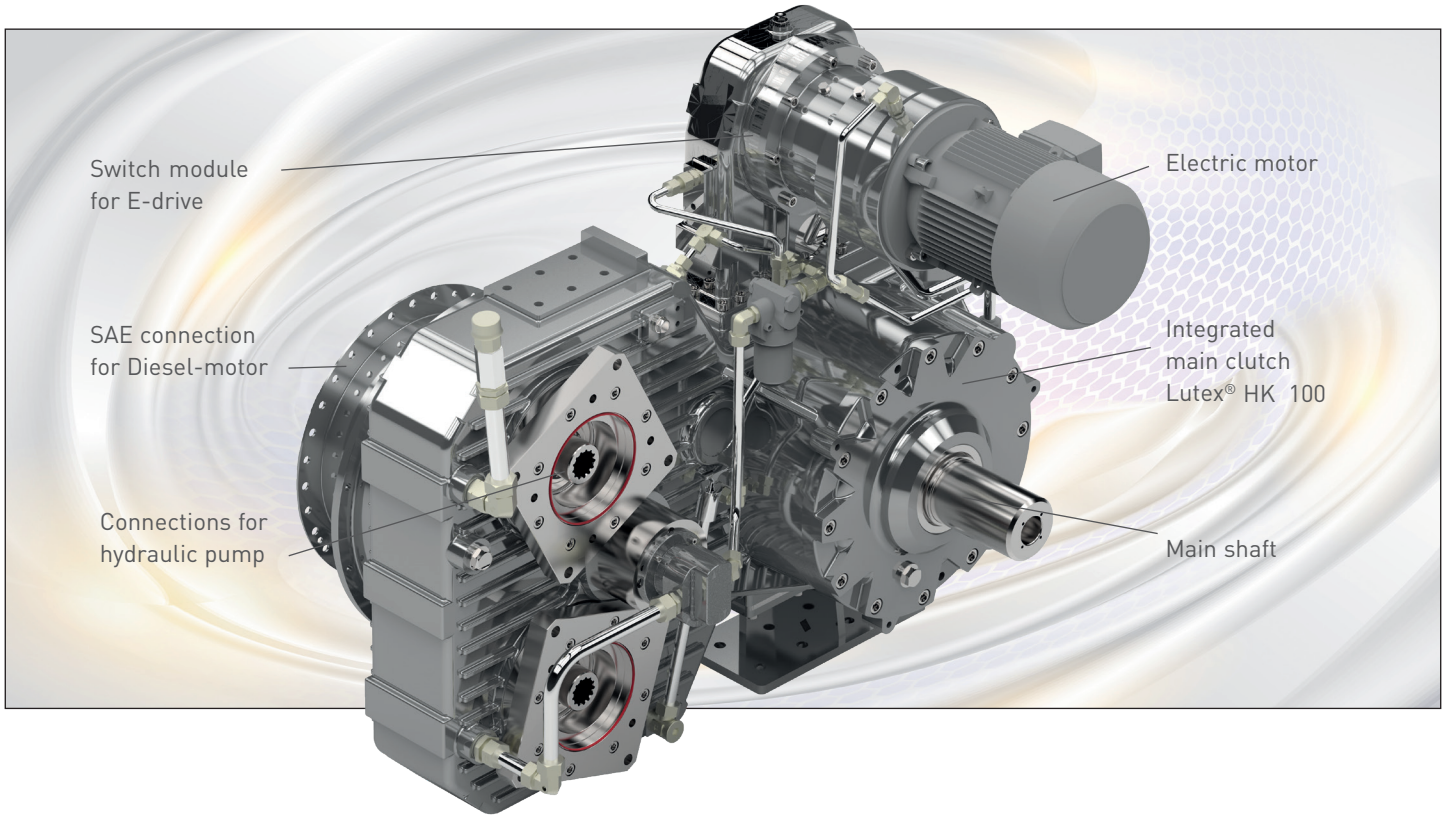

Field of application

Hybrid drives reduce impact on the environment. Based on our proven series of gearboxes for construction machinery, marine hybrid module Revox® HE is a new segment in our portfolio.

The main drive is provided by a conventional diesel engine solution. It is possible to combine electric or other motors via up to three connections for auxiliary drives with an output that corresponds to up to 60% of the main drive power.

It is also possible to connect hydraulic pumps in parallel directly, for example. In that case, the drive is also engaged via a hydraulically actuated Lutex® HK multi disc clutch.

Technical data

Diesel engine	
Max. input power	400 kW
Idle speed	800 ... 1000 rpm
Operating speed	1700 ... 2100 rpm
Engine connection	SAE 1, 14-inch-flywheel
Ratio to output drive	i = 1,41
Electric motor	
Theoretical drive power	max. 236 kW
Ratio to output drive	i = 1,81
Switchable clutch HK 100	
Static torque	7600 Nm
Operating pressure	40 bar

Function types of the hybrid systems

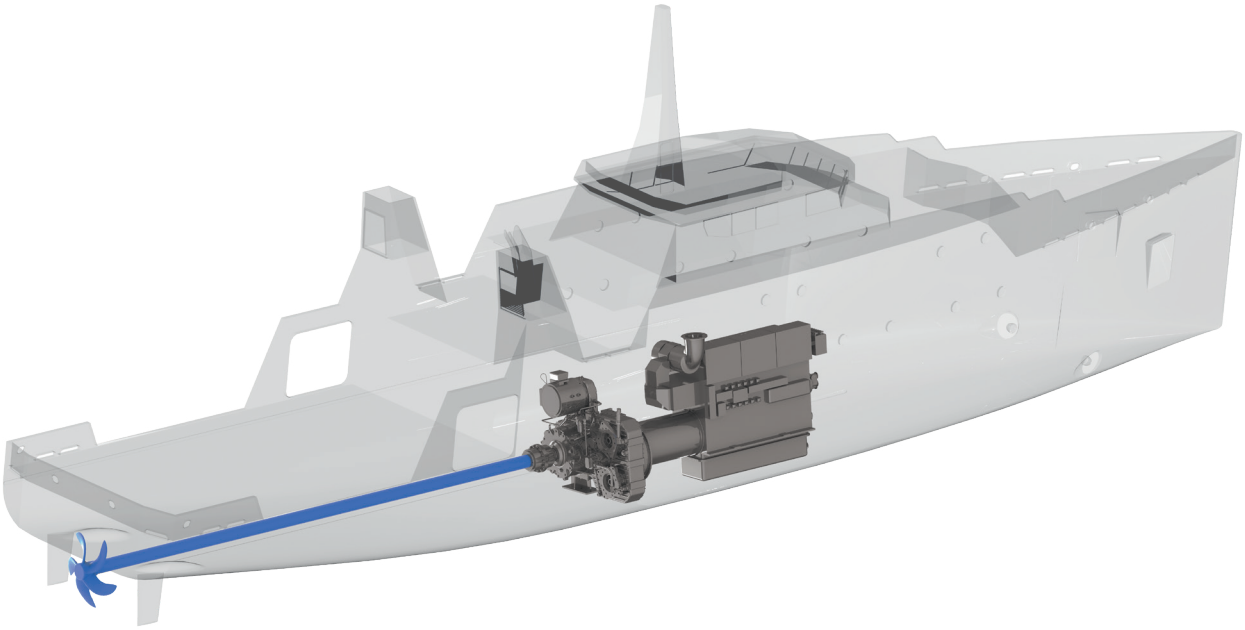

E - mode

Traveling using only electric power, e. g. in port or close to the coast.

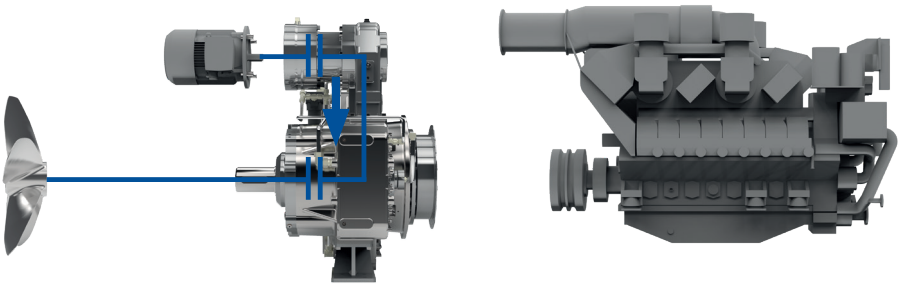

Diesel mode

Standard operation – using the e-motor in parallel as a generator if necessary, e. g. to charge the batteries.

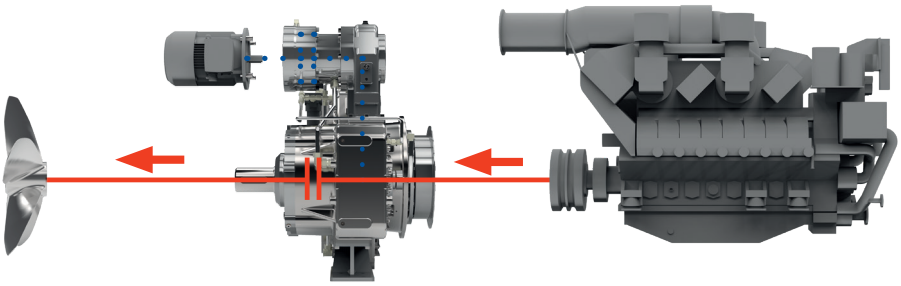

Boost mode

The diesel engine and the electric motors work together. The boat reaches e. g. its top speed more quickly as a result.

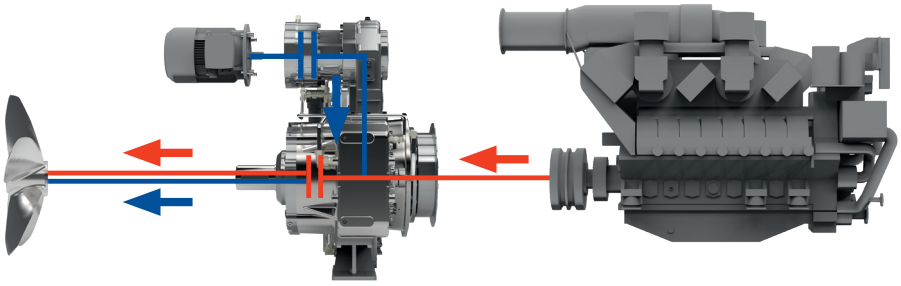

SMART DRIVE SOLUTIONS

CONTACT

DESCH Canada Ltd.
240 Shearson Crescent
Cambridge
Ontario
Canada N1T 1J6
T +1800 2631866
+1519 6214560
F +1519 6231169
desch.canada@desch.com

DESCH USA LP
Manufacturing,
Assembly
4940 Merrifield Pkwy
Dallas, Texas
75236
T +1 330 937 9030
F +1 330 937 9031
desch.dallas@desch.com

DESCH USA LP
Sales, Engineering,
Service Support
3700 Embassy Pkwy,
Suite 530 Akron Ohio
44333
T +1 330 937 9030
F +1 330 937 9031
sales.usa@desch.com

Technical changes reserved · © DESCH North America GmbH & Co. KG ·