SMART DRIVE SOLUTIONS

DESCH COMPLETE PRESS DRIVE ECO-KA

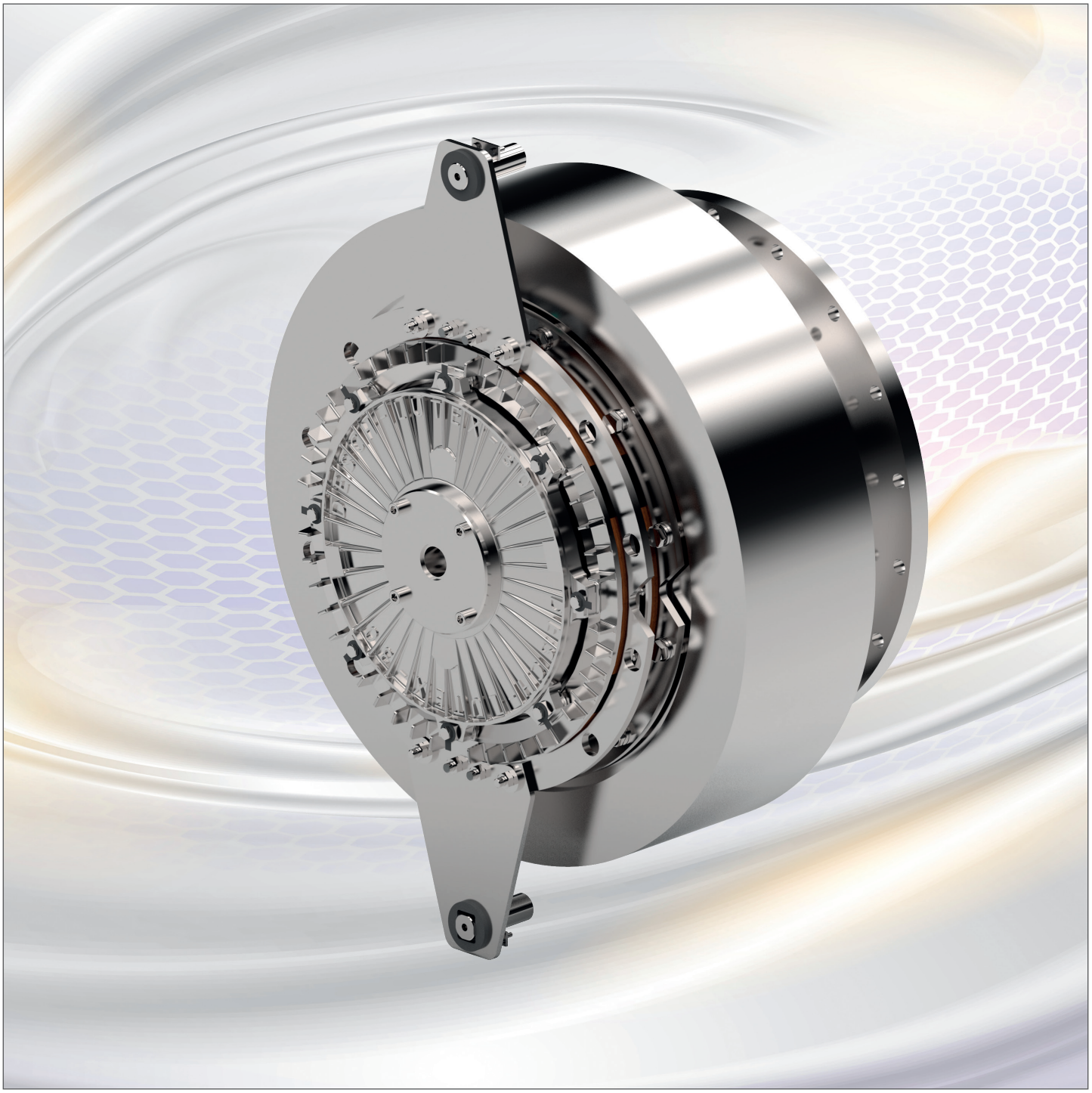

THE NEW DESCH ECO-KA

is a high-quality complete press drive (KA) with a planetary gearbox, flywheel and pneumatically operated clutch/brake combination (CBC) that is standardized to the following main components:

- a fast-running standard flywheel from which large amounts of energy can be extracted even at very low output speed
- a high-performance planetary gearbox with a gear ratio of i = 5.7, with a effectivity over 98% and extremely low moments of inertia
- a tried and tested pneumatically operated clutch-brake combination for permanent, low-wear operation with a clamping set connection to the clutch shaft and options that allow you to adapt to difficult operating conditions.

The ECO-KA series covers the torque range between 1,8 and 125 kNm.

Which machines is the ECO-KA intended for?

For machines in continuous single-stroke operation which: 1. accelerate the drive train, 2 provide the working capacity from a flywheel as the energy store that is necessary for the work process, 3. stop the machine. It is mainly used in presses, sheers, stamping presses, etc. in a torque range up to 125 kNm, which are to be fitted with a high-quality, powerful drive.

The designs below are particularly suitable for the ECO-KA:

- C-frame presses
- 1- and 2-point presses with longitudinal shaft arrangement
- 2-point presses with transverse shaft arrangement with the ECO KA as the gearbox input stage
- increase performance when refer bishing flywheel machines

Why this drive?

DESCH has developed the drive concept of the KA and is the market leader in this drive sector. More than 2,500 complete drives in the torque range between 1,600 and 1,600,000 Nm are sold all over the world. 30 years production of complete drives and more than 60 years experience in development of planetary gearboxes, clutches and brakes led to the design of the ECO-KA. This also results in high quality standards, smooth running and very high service life. Finally, every drive is tested extensively on our own test rig.

The ECO-KA is powerful, economical and has a long life time.

Your benefits!

Rigorous simplification and limitation to the key functions has led to a standard drive that is extremely competitively priced and has a very short delivery time. And of course it complies with DESCH's exacting quality standards. Apart from this, the drive stands out due to its very low moment of inertia, which has been reduced even further compared to the previous series.

This results in:

- a shorter braking angle, which leads to more safety and higher productivity
- a lower energy requirement and less wear, since the system does not need to accelerate and decelerate as much mass resulting in less friction work per switching operation.

This means that it is better value for money, safer, more economical and more productive.

The basic benefits provided by the KA as a ready-to-install unit includes, for example:

- no design work
- a drive structure is not necessary
- purchasing and installing the drive components are not necessary, simplification of the machine no assembly, frame apply to the ECO-KA of course

What is the benefit to your customer?

Machines that are fitted with an ECO-KA score heavily with all the advantages of a DESCH press drive:

- low-noise, low-vibration operation
- a powerful machine using tried and tested technology
- a durable quality product that is tested by the manufacturer
- low operating costs for energy and servicing
- greater safety and higher productivity due to the shorter braking angle
- high spare part availability
- professional DESCH 24-hour service team
- modular components – due to the modular structure of the pneumatic CBC that is used, it is possible to adapt it to new demands, like heavy impact loading in the working process, or shorter braking angles, for example, by retrofitting rather than having to dismount the drive

TECHNICAL DATA

Working capability in dependence of the flywheel speed

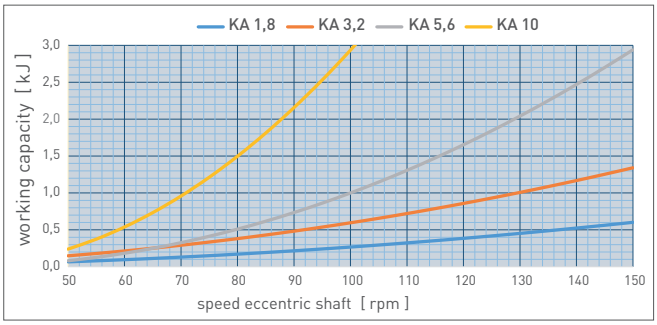

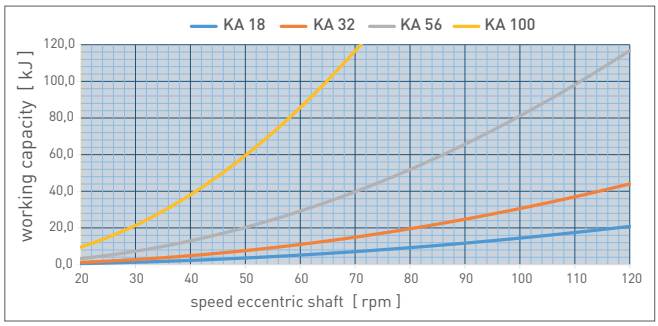

Connection dimensions

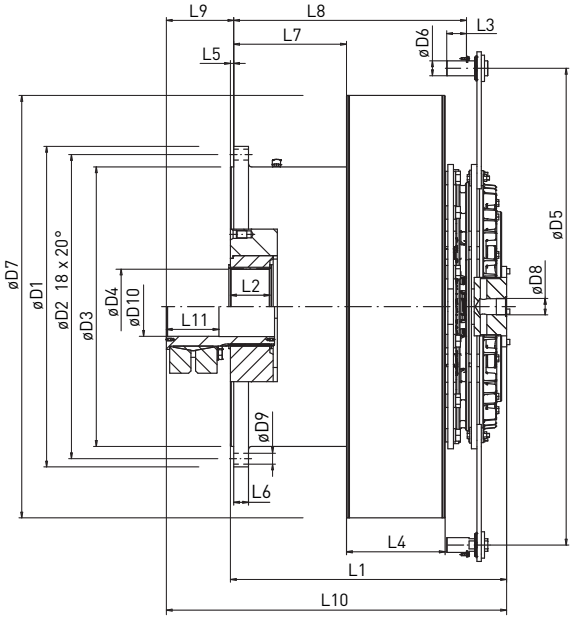

ECO - KA sizes with LKB		ECO-KA 1,8	ECO-KA 3,2	ECO-KA 5,6	ECO-KA 10	ECO-KA 18	ECO-KA 32	ECO-KA 56	ECO-KA 100
Output torque at 5 bar operating pressure	Nm	1.800	3.200	5.600	10.000	18.000	32.000	56.000	100.000
Max. output torque at 5,5 bar operating pressure	Nm	2.250	4.000	7.000	12.500	22.500	40.000	70.000	125.000
Max. output speed V-belt flywheel drive	rpm	431	369	290	234	194	167	137	110
Max. speed at 42 m/s belt velocity	rpm	2.450	2.100	1.650	1.330	1.100	950	780	625
Mass moment of inertia of flywheel	kgm^2	0,54	1,2	4,2	12,2	29,5	62,3	165	484
Diameter									
D1 Gearbox flange	mm	310	380	425	520	590	730	850	975
D2 TK-Gear screw connection	mm	290	350	400	490	560	690	800	925
D3 Centering h6	mm	265	320	370	450	520	640	740	850
D4 Spline profile acc. to DIN 5480	mm	70x2x34	80x2x38	100x2x48	130x2,5x50	150x3x48	170x4x41	200x5x38	240x6x38
D5 Pin distance	mm	375	430	550	680	850	935	1.160	1.450
D6 Pin	mm	14	14	14	22	30	30	40	45
D7 Flywheel	mm	324	382	487	605	725	841	1.026	1.285
D8 Rotary union	mm	M16	M16	M35x1,5	M35x1,5	M35x1,5	M35x1,5	M50x1,5	M50x1,5
D9 Through bore 18 x 20°	mm	9	11,5	13,5	13,5	17,5	22	26	33
D10 Bore H7	mm	60	60	80	100	110	130	160	180
Lengths									
L1 Total length	mm	244	310	350	400	460	555	668	840
L2 Spline length	mm	28	32	35	40	50	70	90	120
L3 Pin length for 2-point suspension	mm	20	20	20	35	45	45	50	60
L4 Flywheel width	mm	90	110	140	170	195	235	260	300
L5 Centering	mm	10	10	10	10	10	10	10	10
L6 Flange width	mm	15	20	20	25	25	30	40	45
L7 Flange width	mm	85	106	122	128	148	185	246	344
L8 Flange width	mm	192	240	286	320	365	458	551	706
L9	mm	70	75	86	117	133	135	141	205
L10	mm	315	375	426	495	584	680	791	1045
L11	mm	40	48	50	75	90	100	100	160

MACHINE DATA FOR DRIVE DIMENSIONING

Single stroke operation ☐			**continuous running**	☐
Number of switching operations in single stroke operation	z	=	_____	switching oper. per minute
Press force	F	=	_____	kN
Crank radius	r	=	_____	mm
Duty stroke for d. b. c. to press force	a	=	_____	mm
Alternative:				
Required torque at the ECO-KA pinion shaft	T_{Ab}	=	_____	kNm
Speed / speed range at the eccenter shaft	nE	=	_____	rpm
If necessary ratio to layshaft	i	=	_____	
Mass moment of inertia of the machine reduced to the ECO-KA pinion shaft	J mach.	=	_____	kgm^2
Required brake angular	ϒ	=	_____	°
Required working capacitiy	A max.	=	_____	kJ
at minimum speed of eccenter shaft	nE rpm.	=	_____	rpm

Favourite design:

Gear coupling at the output - you cannot or do not wish to toothed the drive shaft?

In such a case we like to offer the delivery of the according gear coupling with related shrink-disc.

☐ **with assembly gear coupling** ☐ **with axial air supply** ☐ **with radial air supply**

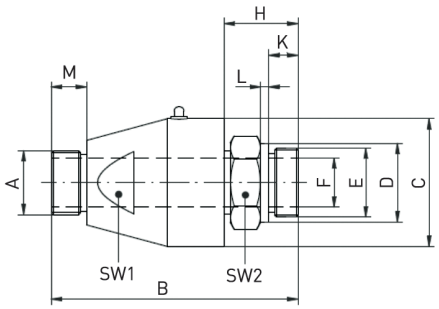

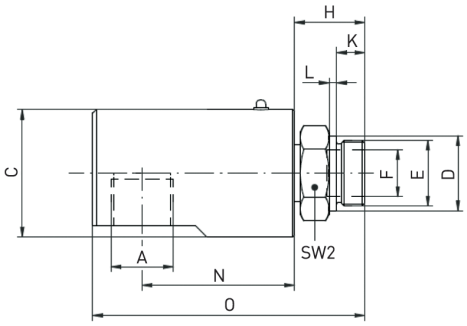

Rotor size	G 3/8	G 1/2	G 3/4	G1	G 1 1/4
ECO-KA assignment of sizes	1,8	3,2	5,6 / 10	10/18/32/56	56 / 100
Max. speed rpm	2800	2500	1400	1200	800
DESCH-part number axial design	0 080 033	0 080 034	0 080 035	0 080 036	0 080 037
DESCH-part number radial design	0 083 391	0 082 246	0 083 304	0 081 783	0 083 750
A	G 3/8	G 1/2	G 3/4	G1	G 1 1/4
C	38	55	65	65	88
D h7	20	40	40	40	60
E	M 16	M 35 x 1,5	M 35 x 1,5	M 35 x 1,5	M 50 x 1,5
F	10	15	19	25	32
B	81,5	115,5	123,5	125,5	149
H	26,5	35,5	37,5	37,5	42
K	14	15	15	15	22
L	4	4	4	4	6
M	12	12	16	18	20
N	47	75	78	81,5	105
O	86,5	127,5	134,5	145,5	178
SW1	30	41	46	46	70
SW2	22	41	41	41	55

Please contact us, we will be pleased to advise you about the optimal installation configuration, with regard to:

- Determination of the drive size
- Compressed-air supply
- Supply and discharge of the lubricating oil
- Sealing and mounting to the machine stand
- Realization of customer specifications

INSTALLATION INSTRUCTIONS

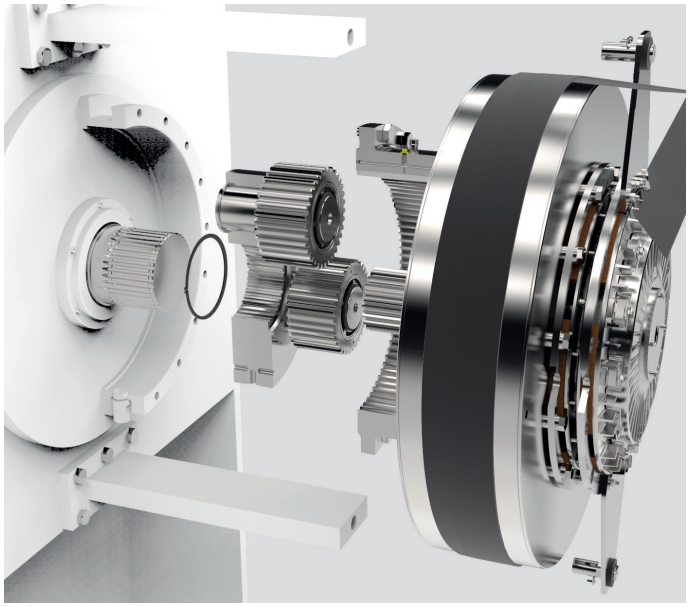

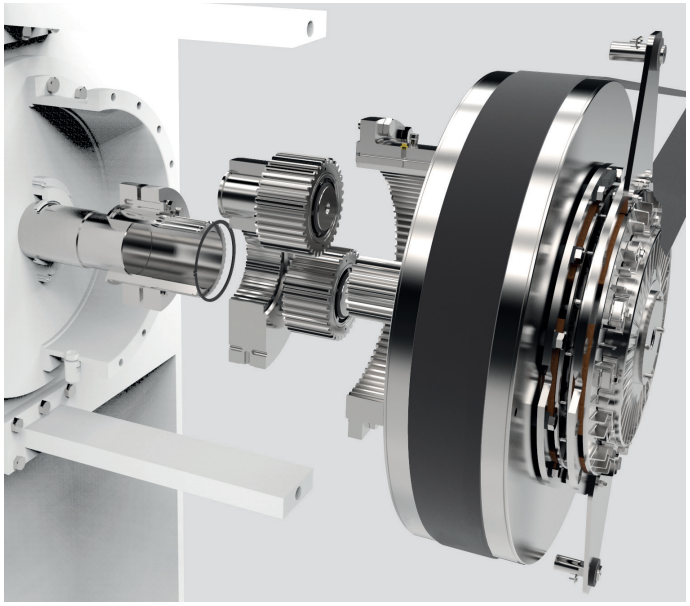

Assembly without gear coupling

- Push planet carrier onto the appropriately machined DIN 5480 teeth of the shaft to be driven and secure them with retaining rings.
- Carefully mounting of the spline into the teeth of the planetary gears, push it via the teeth to the machine base and bolt the gearbox flange to the machine base
- Mount the lubricating oil feed/drain
- Mount and tension the drive belt for the flywheel
- Fasten the brake disc
- Bolt on the rotary connection for the compressed air supply

Assembly with gear coupling

Push over the gear coupling with shrink disc to the shaft end and tighten the shrink disc according to specificatons

- Push planet carrier onto the appropriately machined DIN 5480 teeth of the shaft to be driven and secure them with retaining rings.
- Carefully mount the spline into the teeth of the planetary gears, push it via the teeth to the machine base and bolt the gearbox flange to the machine base
- Mount the lubricating oil feed/drain
- Mount and tension the drive belt for the flywheel
- Fasten the brake disc
- Bolt on the rotary connection for the compressed air supply

OTHER DESCH PRESS DRIVES / DRIVE COMPONENTS

- Flywheels according to customer specification, static and dynamic balanced of steel, grey- and spheroid cast iron
- Lutex® LKB and LS , clutch/brake combination pneumatically actuated, clutch torque from 250 Nm to 120 kNm
- Slewing rings, press safety valves
- Lutex® HKB clutch/brake combination, hydralically actuated, clutch torque from 3 kNm to 500 kNm, with stationary or rotating housing, with rotary inlet for oil, control unit and hydraulic unit
- Standard complete drive or omplete drive according to customer specification with pneumatically or hydraulically actuated Lutex® KBK gear ratio from 3,5 to 60 output torque from 5 kNm to 2500 kNm
- Servox® gear, with saftey brake
  output torque from 2,5 kNm to 2500 kNm
  ratios from 3,5 to 100, for single or multi-motor performance in standard- and according to customer specifications

SMART DRIVE SOLUTIONS

CONTACT

DESCH Canada Ltd.
240 Shearson Crescent
Cambridge
Ontario
Canada N1T 1J6
T +1800 2631866
+1519 6214560
F +1519 6231169
desch.canada@desch.com

DESCH USA LP
Manufacturing,
Assembly
4940 Merrifield Pkwy
Dallas, Texas
75236
T +1 330 937 9030
F +1 330 937 9031
desch.dallas@desch.com

DESCH USA LP
Sales, Engineering,
Service Support
3700 Embassy Pkwy,
Suite 530 Akron Ohio
44333
T +1 330 937 9030
F +1 330 937 9031
sales.usa@desch.com

Technical changes reserved · © DESCH North America GmbH & Co. KG ·