SMART DRIVE SOLUTIONS

DESCH Planox®

Safety Clutches for Extruder Drives

EA 19 · GB

DESCH Planox® SAFETY CLUTCHES FOR EXTRUDER DRIVES

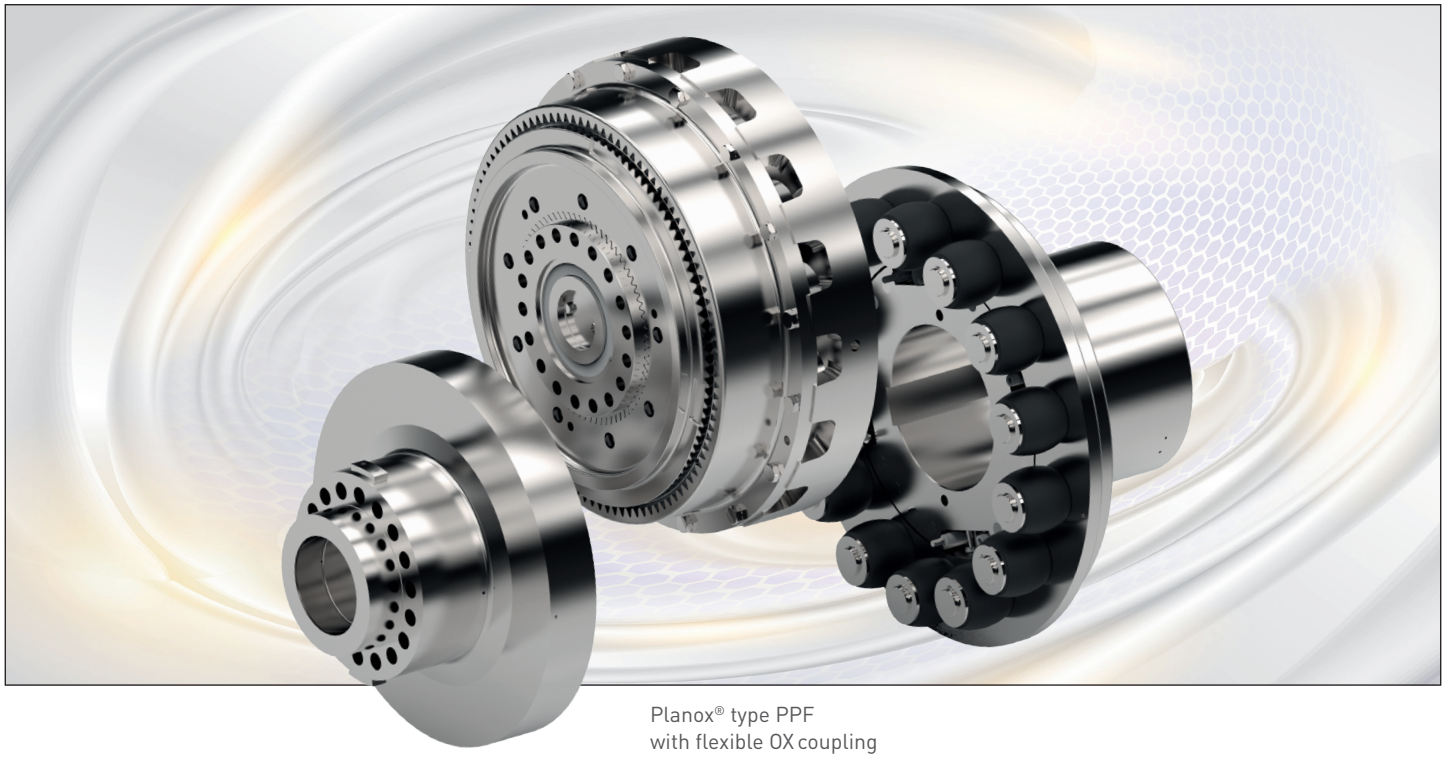

Planox® type PPF
with flexible OX coupling

More than 90 years, DESCH is an internationally leading manufacturer of safety clutches for mechanical and process engineering. DESCH know-how offers support for individual drive concepts and solutions for low as well as high torque power ranges. Outputs of up to 10,000 kW are easily achieved.

Global market and technology leaders in the extruder industry use a combination of the DESCH Planox® friction clutch with an flexible DESCH OX coupling to protect the shafts in the drive train. In this combination, the torque is directly influenced by varying the air pressure. The air supply is axial, but can also be radial on request.

When there is an overload, to protect the high-precision worm shafts, the drive is completely disengaged from the output side in fractions of a second.

In order to ensure disengagement accuracy, each clutches friction surface is ground-in to correspond to a defined pressure/torque curve on our specially developed test benches.

The Planox® PPF-RA version has been developed to reduce maintenance and related downtime to a minimum. If the friction part has to be replaced due to wear, it can be removed radially, i.e. the engine or gearbox does not have to be moved.

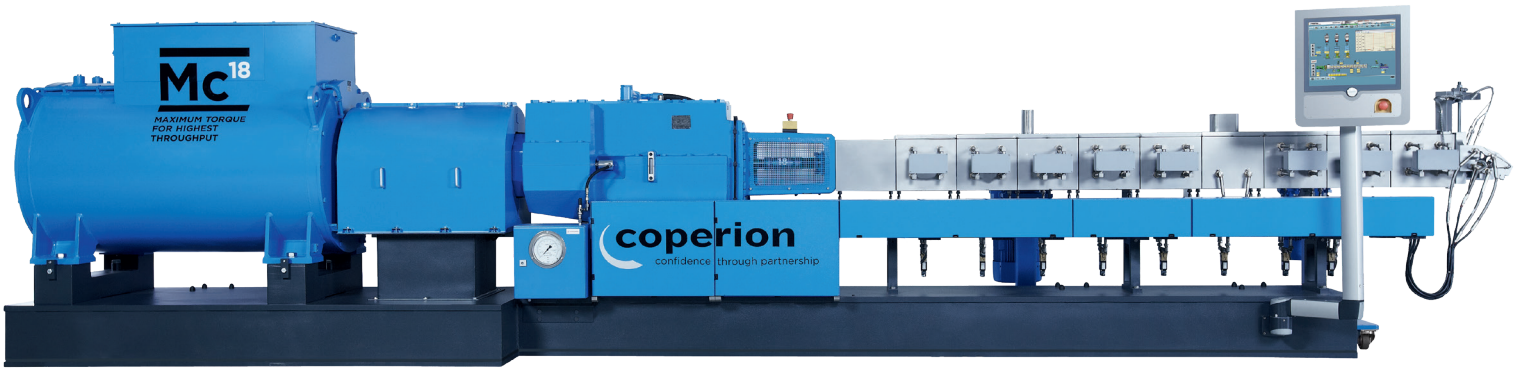

FUNCTION AND DESIGN OF THE CLUTCH COMBINATIONS

Planox® clutch type PPF - RA with flexible OX coupling

This Planox® clutch type PPF - RA is a pneumatically engageable dry plate friction clutch. The clutch is engaged by air pressure. When the air pressure drops the clutch is completely disengaged and no remaining torque can be transmitted as the pressure springs ensure that the pressure plates are separated. The compressed air is fed into the clutch trough the gearbox shaft.

The Planox® clutch type PPF - RA allows for the removal of friction part in a radial direction. In case of wear, necessary maintenance may be carried out without removing the electric motor and gearbox. All other parts of the clutch and the flexible OX coupling may remain in situ. This reduces the assembly/disassembly time as well as the production down time and also reduces repair and maintenance costs considerably.

Planox® clutch type PPRF with flexible OX coupling

This combination differs only in the design of the Planox® clutch. With the Planox® type PPRF the compressed air is fed in radial direction from outside into the cylinder of the clutch. With this design, long shafts do not have to be bored to allow air passage to activate the clutch.

The clutch actuating cylinder and piston runs on angular contact ball bearings, by which the necessary engagement thrust is transferred. The torque, resulting from the friction of the angular contact ball bearings is retained by a torque arm.

The friction part of the Planox® type PPRF cannot be dismantled in radial direction.

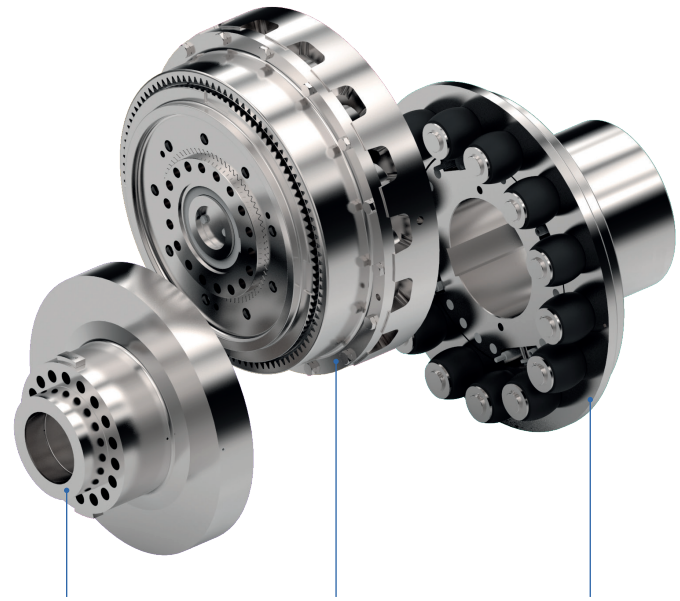

Type Planox® PPF - RA - OX

Type Planox® PPRF - OX

TECHNICAL DATA
Planox® SAFETY CLUTCHES PPF

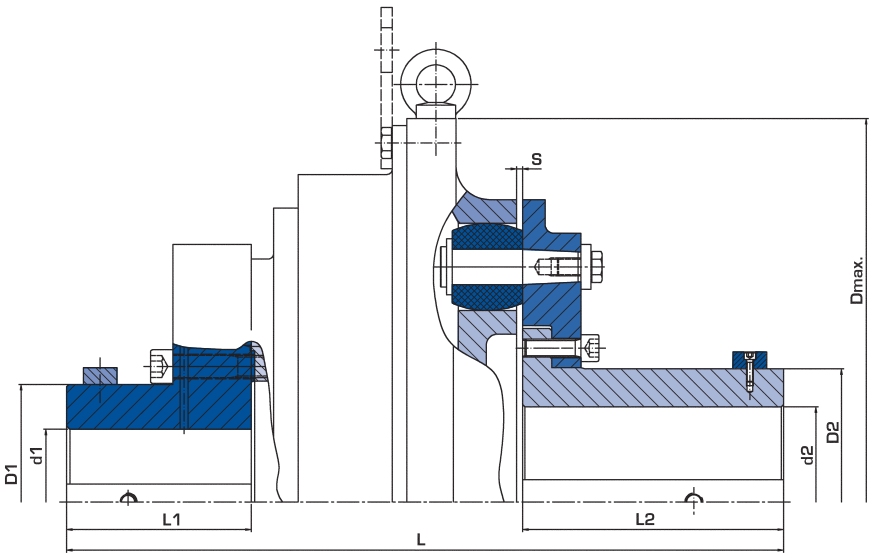

Size	Torque[1] T min. - T max. Nm	Speed n max. rpm	D max. mm	L mm	D1 mm	d1 max. mm	L1 mm	D2 mm	d2 max. mm	L2 mm	S Orpex® mm
PPF 101 H - OX - WS 252	390 - 2.300	3.000	325	277 - 281	-	60	100	160	110	100	2 - 5
PPF 112 RA1 - OX - F 252	700 - 2.300	2.500	365	375 - 376	100	70	100	160	110	130	4 - 5
PPF 143 RA1 - OX - F 285	1.900 - 5.000	2.500	480	444 - 447	127	90	130	182	130	150	4 - 6
PPF 163 RA1 - OX - F 360	4.300 - 9.500	2.270	530	548 - 550	156	100	170	197	140	180	4 - 6
PPF 183 H-RA - OX - F 450	8.500 - 21.245	1.950	585	587 - 590	182	130	203	238	170	180	4 - 7
PPF 213 H-RA - OX - F 500	12.000 - 30.825	1.800	685	656 - 659	224	130	225	290	200	200	4 - 7
PPF 243 H-RA - OX - F 560	18.000 - 49.850	1.950	745	848	233	180	247	300	200	250	8
PPF 272 H-RA - OX - F 630	26.000 - 66.425	1.800	870	1.007	260	180	247	340	220	386	8
PPF 273 H-RA - OX - F 710	39.000 - 97.500	1.950	870	1.090	260	180	247	420	300	400	8
PPF 274 H-RA - OX - F 800 SB	48.000 - 130.000	1.800	940	1.161	260	195	351	450	320	400	8
PPF 363 H-RA - OX - F 900/20	70.000 - 145.000	1.200	1.145	1.224	380	270	455	530	280	380	29

1) required air pressure min. 2 to max. 5,5 bar

TECHNICAL DATA

Planox® SAFETY CLUTCHES PPRF

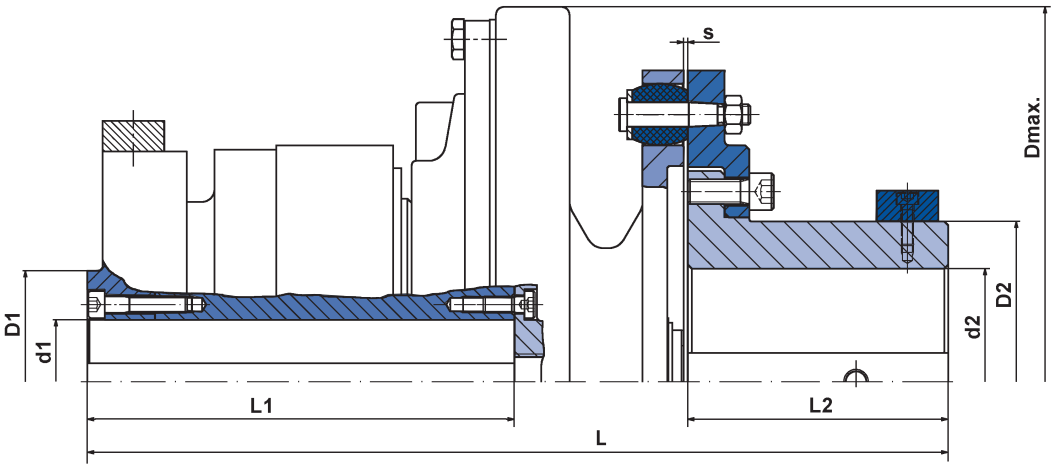

Size	Torque[1] T min. - T max. Nm	Speed n max. rpm	D max. mm	L mm	D1 mm	d1 max. mm	L1 mm	D2 mm	d2 max. mm	L2 mm	S Orpex® mm
PPRF 101 - OX - F 198	295 - 927	2.500	325	419,5 - 422,5	224	60	208	156	100	127	2 - 5
PPRF 102 - OX - F 198	591 - 1.855	2.500	325	443,5 - 446,5	224	60	232	156	100	127	2 - 5
PPRF 111 - OX - F 198	379 - 1.057	2.200	365	419,5 - 422,5	224	60	208	156	100	127	2 - 5
PPRF 112 - OX - F 198	667 - 2.024	2.200	365	443,5 - 446,5	224	60	232	156	100	127	2 - 5
PPRF 142 - OX - F 252	1.087 - 3377	1.900	480	500,5 - 503,5	325	90	280,5	160	110	130	2 - 5
PPRF 142 H - OX - F 252	1.336 - 4149	1.900	480	500,5 - 503,5	325	90	280,5	160	110	130	2 - 5
PPRF 163 - OX - F 360	2.000 - 7120	1.800	530	638 - 641	380	110	330	195	135	180	3 - 6
PPRF 183 - OX - F 400	3.700 - 11.570	1.750	585	686 - 689	420	125	347	245	150	211	3 - 6

1) required air pressure min. 2 to max. 5 bar

ADVANTAGES OF THE Planox® - COMBINATION

- Immediate disengagement in a fraction of a second in the event of an overload
- The friction component can be removed radially, thereby allowing the minimum time for disassembly / assembly
- Vibration-damping in combination with a flexible coupling
- Combining a flexible coupling compensates for some shaft misalignment
- Complete disengagement of the drive and output side after power is switch off
- ATEX protection possible (Zone 2, 22)
- Smooth running due to high balancing quality
- Operating the extruder at maximum load limits has no influence on the lifetime of the clutch
- The Planox® clutch can be integrated into the control process of the extruder because the torque setting can be adjusted and set by varying the clutches air pressure
- After re-engaging the extruder, it is immediately ready for operation again without any manual effort
- Consistent and repeatable disengagement accuracy at +/- 5% of the pre-set torque (Providing the friction lining grinding in process has been carried out)
- Process machinery can be started up either with a completely separated or connected clutch; insensitive to shock loads
- Considerable reduction in loss of production costs
- No change in the torque curve of the ground-in friction unit, even after longer periods of storage

FACTORY CALIBRATION OF TORQUE SETTING

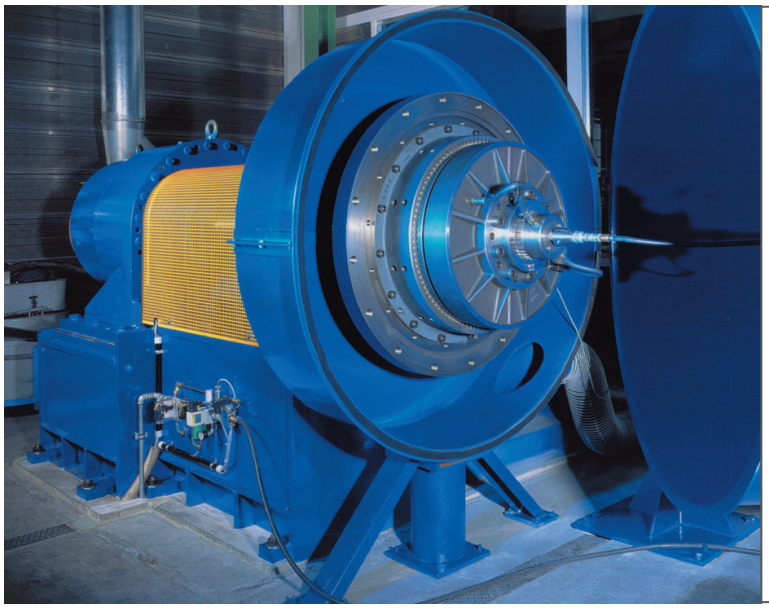

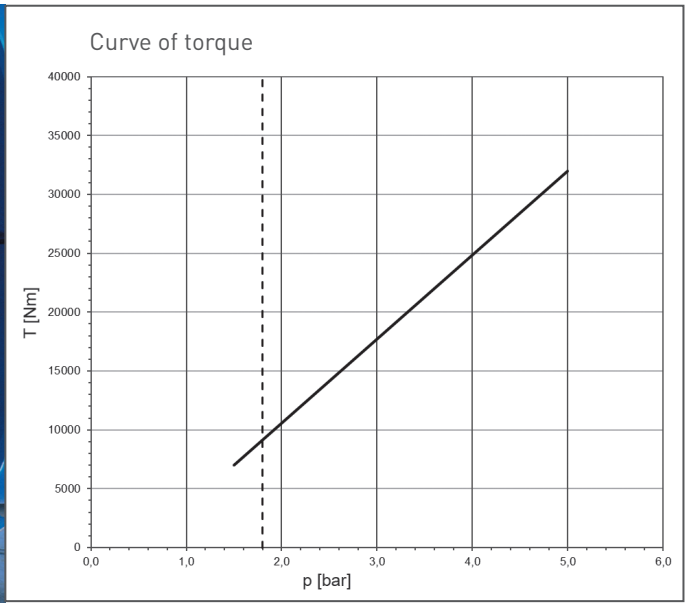

Every friction element of a Planox® clutch for use in extruder applications is "ground-in" on a computercontrolled test rig. A torque curve corresponding to the actuating air pressure is recorded by computer. Using this torque curve any torque required for the operation of the extruder can be set accurately by controlling the air pressure.

The test rigs have been developed by DESCH.

ELECTRONIC MONITORING

The clutch combinations are equipped with proximatory sensors displaced by 180° on the output and input side of the clutch for electronic slip monitoring. The sensors are connected to a control unit which counts the pulses at the input and output sides of the clutch combination and compares them with each other. If a preset limit is exceeded, the clutch will be disengaged.

SWITCHING SYSTEM

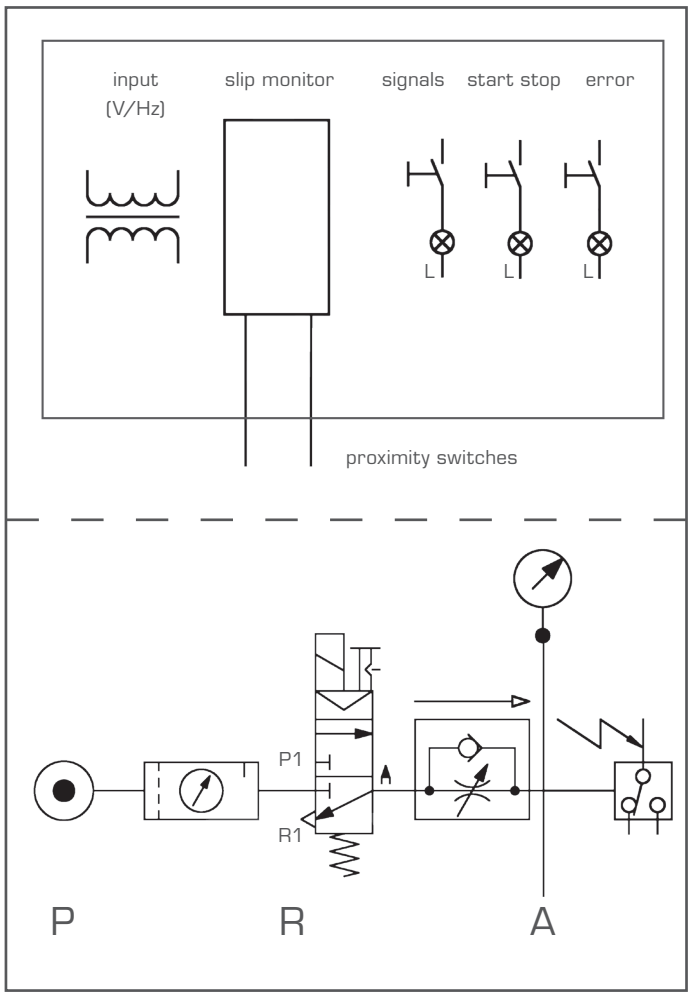

The DESCH slip control is an electro - pneumatic control. The pneumatic part consists of a maintenance unit, control valve, a throttle check valve and a pressure switch. The electric part consists of the power supply, slip monitor and the electrical control for the pneumatics, as well as the interface to the general control of the machine.

The pneumatic controls the necessary air-supply to the Planox® clutch. The electric monitors the in- and output rpm of the clutch. The monitor calculates the resulting difference in speed und controls the working pressure of the clutch.

The Planox® clutch can be started (engaged) either manually at the switchbox or by the general control of the machine. The slip monitor controls the clutch and immediately disconnects (opens) it if slipping of the clutch exceeds acceptable values. This will be shown as a fault.

Furthermore the working pressure of the clutch will be monitored. As soon as a given value is surpassed the clutch will open and recorded as a fault. The fault signals will also be reported to the general control. After acknowledgment of the faults the clutch can be re-started. It can also be shut down manually at the switchbox or by the general control of the machine.

The DESCH slip monitor is available in the following variations:

- one-piece - pneumatic and elektric in a switchbox
- two-piece - pneumatic and electric in two separate switchboxes, which are bolted on top of each other
- possible input voltage 24V/DC (from the main control system), 110-240V/AC 50Hz; 180-550V/DC 47-63 Hz

The customer should supply the input voltage and air-pressure (6 bar). Sensors for slip-control are part of our scope of supply.

SMART DRIVE SOLUTIONS

CONTACT

DESCH Canada Ltd.
240 Shearson Crescent
Cambridge
Ontario
Canada N1T 1J6
T +1800 2631866
+1519 6214560
F +1519 6231169
desch.canada@desch.com

DESCH USA LP
Manufacturing,
Assembly
4940 Merrifield Pkwy
Dallas, Texas
75236
T +1 330 937 9030
F +1 330 937 9031
desch.dallas@desch.com

DESCH USA LP
Sales, Engineering,
Service Support
3700 Embassy Pkwy,
Suite 530 Akron Ohio
44333
T +1 330 937 9030
F +1 330 937 9031
sales.usa@desch.com

Technical changes reserved · © DESCH North America GmbH & Co. KG ·