SMART DRIVE SOLUTIONS

DESCH Conax® - CM / CR

Friction and slipping clutches

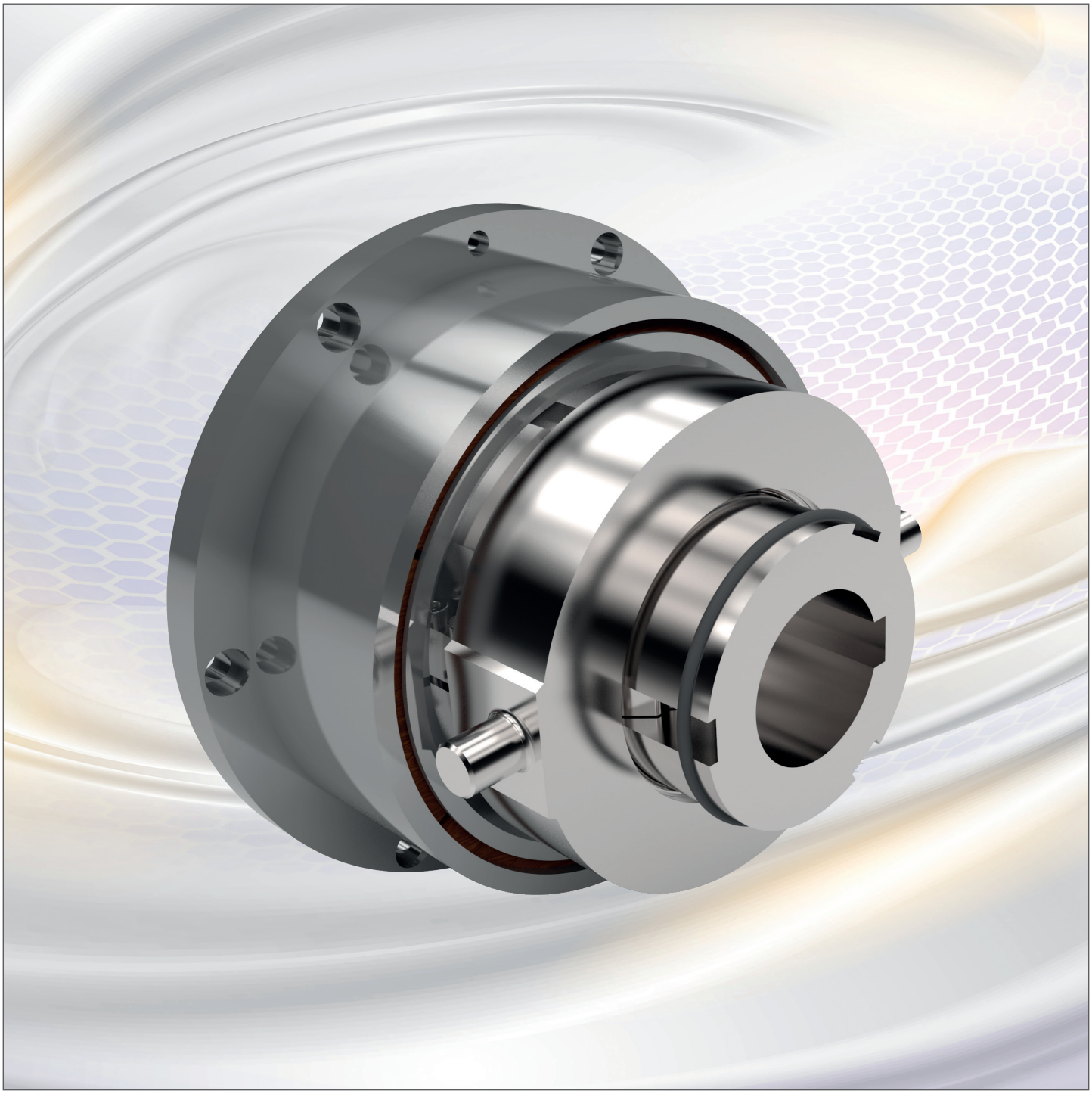

Conax® friction clutches CM

Fig. 1
Conax® friction clutch
Type CM

Conax® friction clutch type CM

The characteristic feature of the Conax® clutch is the expanding symmetrical friction ring* between the cone-shaped metal discs. It is divided into six segments which are held together by a tension spring. Axial displacements of the shafts are offset in the bore of the casing when the clutch is disengaged. The contact forces in the system cancel each other out, there is no axial loading of the machine bearings when the clutch is engaged.

Operation of the Conax® friction clutch

When the clutch is being engaged, the sleeve and the deepgroove bearing (17) slide over the clutch levers (5). They press the metal disc (7) against the friction ring* (9) which, as a result, slides outwards evenly until it forms a friction connection with the clutch casing (1) and the flanks of the metal discs (7) and (11). When the clutch is being disengaged, the sleeve and the deepgroove bearing (17) release the clutch levers (5). The pressure springs (8) press the metal discs (7 and 11) apart and the friction ring* segments are pulled inwards by the tension spring (10). As a result the clutch section is completely detached from the casing (1). The clutch is set and re adjusted by tightening the adjusting ring (12), which is secured against turning by the locking screw (19). The segments of the friction ring* are held together by the tension spring up to the speed nF. The tensile force of the spring is greater than the centrifugal force of the segments. In order to avoid a residual torque when the clutch is disengaged, the speed must be reduced to below nF during or shortly after the disengaging operation (see table, page 4). The clutch casing is preferably arranged on the input side. When the clutch hub is located on the input side, a friction ring* with an internal spring has to be used if the speed nF is exceeded. In this case the friction ring* is in contact with the clutch casing.

Conax® slipping clutches CR

Fig. 2
Conax® slipping clutch
Type CR

Conax® slipping clutch type CR

The Conax® slipping clutch type CR is designed to protect machine components against desctruction in the event of overloading or blocking of the driven machine. The Conax® slipping clutches are manufactured in two basic designs, depending on the size. The sizes 0,5 to 25 are adjusted with a threaded ring. For this purpose the sizes 50 to 200 are provided with disc spring assemblies. Accurate setting of the torque is possible with both designs. The required contact pressure on the friction ring* (9) is produced by means of the adjusting ring (11) or hexagon nut (17), disc spring (14 or 16) and metal disc (7) and the torque is transmitted by friction. The disc springs (14,16) offset wear over a relatively long path, thus reducing maintenance to a minimum. The clutch is to be set so that it slips when peak loads occur. If a prolonged slipping timer can occur as a result of the machines blocking, it is advisable to provide a monitoring system as per Figs. 21 and 22 (page 10).

Types

CM - Conax® mech. actuated
CR - Conax® slipping clutch
CF - Flange to shaft connection
CW - Shaft to shaft connection

Advantages

- Low maintenance, operation-safe, reliable
- Friction material with long life-time
- High heat capacity
- Approved design

Conax® friction clutches CM

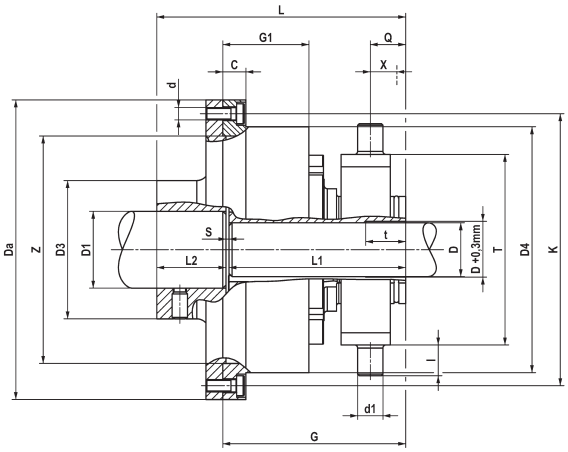

Fig. 6 Type CMW
Size 1 - 16

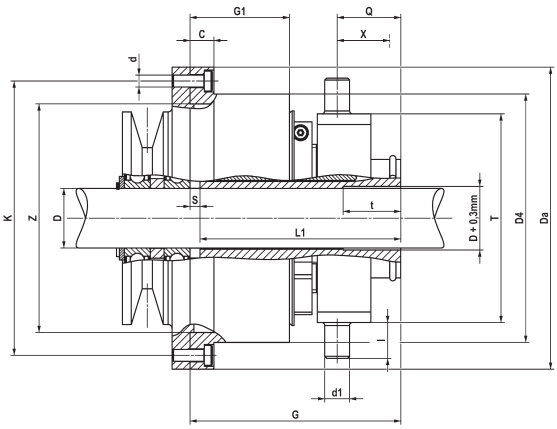

Fig. 7 Type CMF
Size 1 - 16

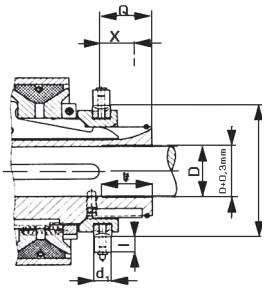

Fig. 8 Type CMW, CMF
Size 25 - 50

Dimensions in mm • Can be delivered ex stock

Size	Torque T_S Nm	Max. speed rpm	Operating speed n_F rpm	C	D_a	D Pilot bore	D[1] (H7) max.	D_1 Pilot bore	D1[1] (H7) max.	D[3]
• 1	100	4000	1900	12	125	10	20	-	30	60
• 2	200	3280	1300	12	152	14	25	-	38	65
• 3	300	2550	1100	15	195	18	35	18	50	90
• 5	500	2120	850	15	235	18	55	25	60	105
• 8	800	1710	730	20	290	18	65	28	70	125
• 16	1600	1360	615	25	365	38	80	32	90	155
25	2500	1225	600	25	410	50	100	42	110	185
50	5000	1080	390	30	460	60	120	48	130	220

Size	D[4]	d	d_1	G	G_1	K	L	L_1	L_2	I
1	100	6 x M 6	11,5	93	45	112	120	90	29	14
2	125	6 x M 6	12,5	104	50	138	135	101	33	14
3	160	6 x M 8	16,5	119	57	177	162	115	45	15
5	200	6 x M 8	16,5	155	78	217	212	149	60	17
8	250	6 x M 10	16,5	159	85	268	231	153	75	18
16	315	6 x M 12	20,5	186	100	340	273	180	90	25
25	355	6 x M 14	25	274	125	383	390	265	120	30
50	400	6 x M 16	28	324	162	430	470	315	150	30

Size	Q	S	T	t	X	Z (H7)	Operating force on sleeve N	Weight [kg] Type CMW	Weight [kg] Type CMF
1	22	1	90	25	13	90	560	4,2	3,2
2	26	1	105	29	16	115	700	6,4	5,1
3	32	2	124	26	19	148	900	12,1	8,8
5	44	3	160	45	26	186	1000	21,2	16,1
8	42	3	185	34	28	234	1100	36,2	25,6
16	45	3	225	34	31	295	1800	65	47
25	80	5	250	85	55	335	2600	120	89
50	90	5	300	100	61	376	4500	193	145

1) The keyways usually are executed to DIN 6885/ 1. Clutch hub executed with 1 set screw, displaced to the keyway by 120°, flanged hub with 1 set screw displaced by 180°.

All weights and mass moments of inertia refer to max. bore.

Conax® slipping clutches CR

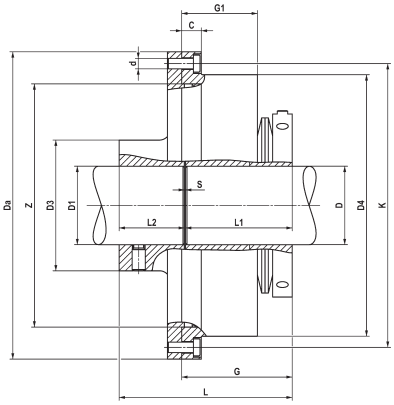

Fig. 11 Type CRW
Size 0,5 - 25

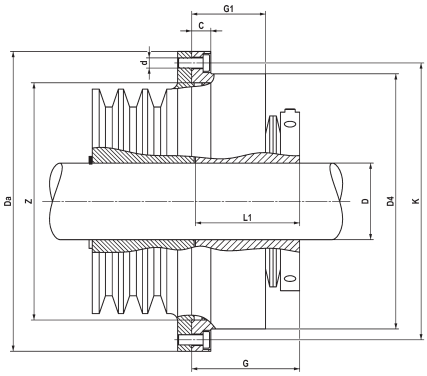

Fig. 12 Type CRF
Size 0,5 - 25

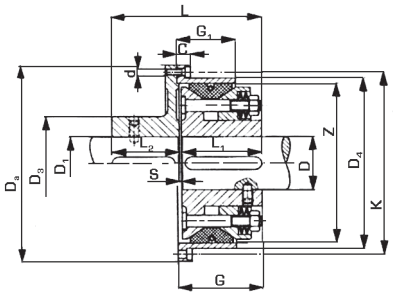

Fig. 13 Type CRW, CRF
Size 50 - 200

Dimensions in mm • Can be delivered ex stock

Size	Torque $T_Ü$ Nm	Max. speed rpm	C	D_a	D Pilot bore	D[1] (H7) max.	D_1 Pilot bore	D_1[1] (H7) max.	D_3	D_4
• 0,5	60	5400	8	92	8	22	-	22	40	69,5
• 1	120	4000	12	125	-	30	-	30	60	100
• 2	240	3280	12	152	-	38	-	38	65	125
• 3	360	2550	15	195	18	50	18	50	90	160
• 5	600	2120	15	235	18	60	25	60	105	200
• 8	960	1710	20	290	18	70	28	70	125	250
• 16	1920	1360	25	365	40	90	32	90	155	315
25	3000	1225	25	410	50	110	42	110	185	355
50	6000	1080	30	460	60	125	48	130	220	400
100	12000	855	30	580	80	150	62	150	250	500
200	24000	700	30	710	90	180	72	180	320	630

Size	d	G	G_1	K	L	L_1	L_2	S	Z (H7)	Weight [kg] Type CRW	Weight [kg] Type CRF
0,5	6 x M 5	37	25	80	60	34	25	1	62	1,4	1,0
1	6 x M 6	53	35	112	80	50	29	1	90	4,0	2,9
2	6 x M 6	63	40	138	94	60	33	1	115	6,0	4,5
3	6 x M 8	72	47	177	115	68	45	2	148	10	7,0
5	6 x M 8	86	58	217	143	80	60	3	186	19	14
8	6 x M 10	111	70	268	183	105	75	3	234	35	24
16	6 x M 12	136	96	340	223	130	90	3	295	66	49
25	6 x M 14	154	105	383	270	145	120	5	335	98	60
50	6 x M 16	189	130	430	335	180	150	5	376	165	115
100	6 x M 20	221	175	536	386	210	170	6	472	255	180
200	6 x M 20	266	200	670	468	250	210	8	594	530	350

1) The keyways usually are executed to DIN 6885/ 1. Clutch and flanged hub excu-ed with 1 set screw, displaced to the keyway by 180°.

All weights and mass moments of inertia refer to max. bore.

Operating systems

Mechanically actuated

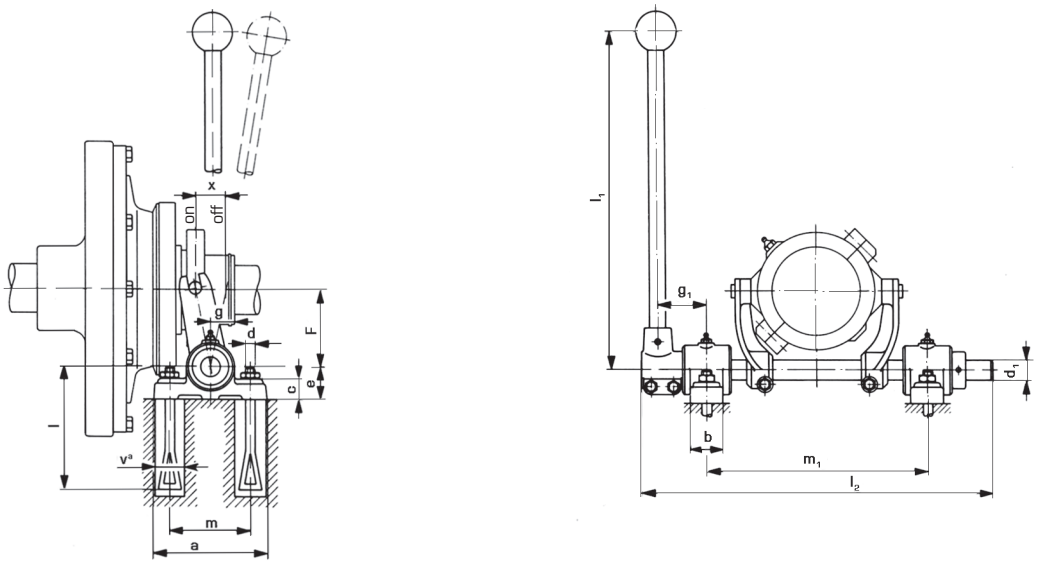

Fig. 16 Type SH

Dimensions in mm

Lever size	Clutch-size	a	b	c	d	d_1	e	F	g	g_1 approx	l	l_1	l_2	m	m_1	va	X	Weight approx kg
1 – 0	1	110	35	18	M 10	20	30	70	16	45	160	400	320	75	190	50	13	3,8
1 – 0	2	110	35	18	M 10	20	30	70	16	45	160	400	320	75	190	50	16	3,8
10 – 0	3	140	40	25	M 12	25	40	95	30,5	60	160	450	430	100	270	50	19	9,5
14 – 0	5	140	40	25	M 12	30	40	117,5	35	65	160	600	490	100	310	50	26	13
14 – 0	8	140	40	25	M 12	30	40	117,5	35	65	160	600	490	100	310	50	28	13
16 – 0	16	160	45	25	M 12	35	50	145	40	70	160	750	565	120	365	50	31	18

When the clutch is running the lip ring must be free of load. If necessary, the control lever should be supported.
Operating forces see page 4.
Flexball operating device and other operating systems on request.

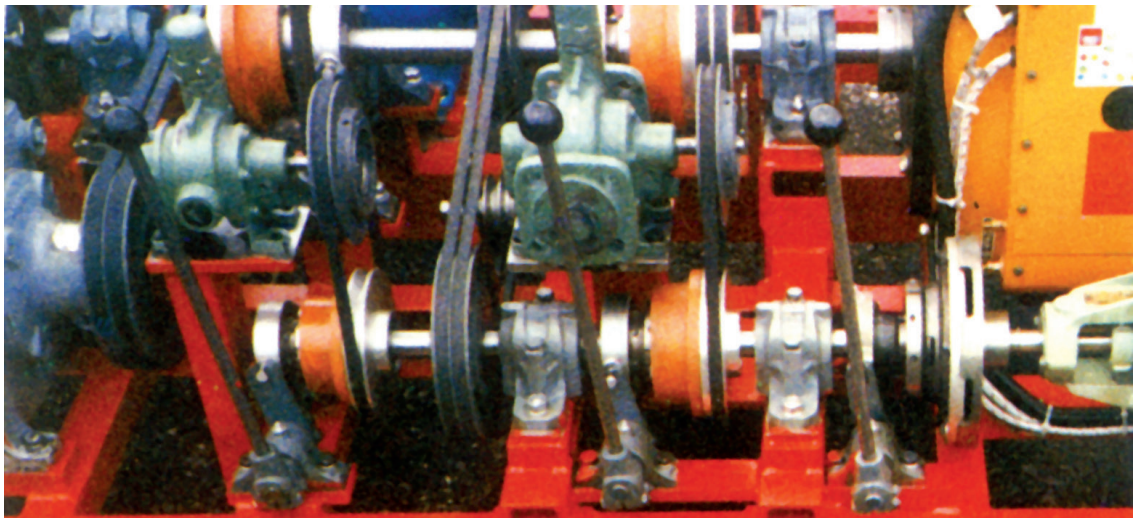

Conax® clutches, type CM in a combined transmission set for bunker boats, inclusively Planox® clutches.

Operating systems

Pneumatically / mechanically actuated

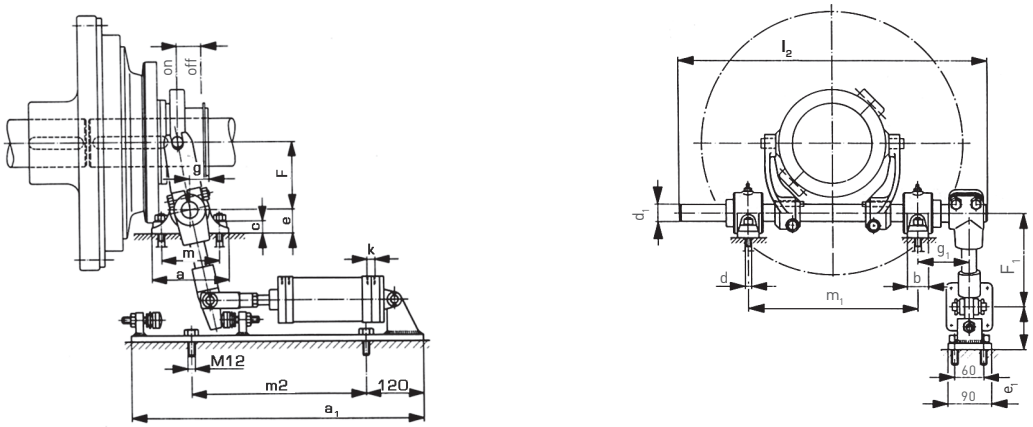

Fig. 17 Type SPWF

Dimensions in mm

Lever size	Clutch size	a	a_1	b	c	d	d_1	e	e_1
1 – 0	1	110	510	35	18	M 10	20	30	85
1 – 0	2	110	510	35	18	M 10	20	30	85
10 – 0	3	140	610	40	25	M 12	25	40	85
14 – 0	5	140	610	40	25	M 12	30	40	85
14 – 0	8	140	610	40	25	M 12	30	40	85
18 – 0	16	160	765	45	25	M 12	35	50	95
21 - 0	25 / 50	160	765	45	25	M 12	40	50	95

Lever size	Clutch size	F	F_1	g	g_1	k	l_2	m	m_1	m_2	X
1 – 0	1	70	228	20	59	M 14 x 1,5	355	75	190	305	13
1 – 0	2	70	228	20	59	M 14 x 1,5	355	75	190	305	16
10 – 0	3	95	205	30,5	76	M 18 x 1,5	465	100	270	365	19
14 – 0	5	117,5	255	35	81	M 18 x 1,5	525	100	310	365	26
14 – 0	8	117,5	255	35	81	M 18 x 1,5	525	100	310	365	28
18 – 0	16	145	310	40	86	M 22 x 1,5	600	120	365	495	31
21 - 0	25 / 50	187,5	400	44	98	M 22 x 1,5	735	120	475	495	55

Hydraulic/ mechanic operating systems on request.
Note: when the clutch is running the slip ring must be free of load. Adjust spring stops accordingly.

Selction of clutch size

Conax® - friction clutches

The torque values stated can be transmitted under constant loading. However, in the event of varying load conditions the corresponding operating factors „S" must be taken into consideration: These can be found on page 9 of the catalogue.

Peak torque loads can occur during engagement or operation dependent on the types of machines being coupled. The clutch size should always be orientated to the maximum load. One should distinguish between the following cases:

1. The clutch has to accelerate an insignificant mass such that nominal torque (TK) is equal to the engaging torque (TS) with regard to operating factor S.

$$T_K = T_L \cdot S \leqq T_S \qquad [1]$$

$$T_K = \frac{P}{n} \cdot 9550 \cdot S \qquad \text{(Nm)} \qquad [2]$$

2. The clutch has to transmit a load torque (TL) during the engagement process itself and to accelerate a large mass.

$$T_K = T_L + T_a \leqq T_S \qquad [3]$$

$$T_K = \frac{P}{n} \cdot 9550 + \frac{J_L \cdot n}{9{,}55 \cdot t_S} \qquad \text{(Nm)} \qquad [4]$$

Clutches for use with driving engines and/ or driven machines with a high coefficient of cyclic load variation (i.e. piston engines) should be selected according to the specific torque requirements (a torque diagram of the application may help). The service factors on page 9 can only serve as reference values. When it comes to the acceleration of large masses or in the case of high shift frequency, extra attention should be paid to the thermal load on the clutch. For this reason, we would ask you to provide us with information in accordance with points 1 – 10 so that we can carry out precise calculations with respect to the heat.

1. Type of driving machine (electric motor, diesel engine etc.)
2. Output power P [kW/HP]
3. Speed of clutch n [rpm]
4. Type of driven machine
5. Highest torque on engagement TL [Nm]
6. Second degree moment of inertia JL referred to the clutch output shaft [kgm²]
7. Number of clutch engagements per hour Sh [1/h]
8. Engagement time ts [sec.]
9. Ambient temperature
10. Type of clutch control required

Please ask for detailed questionaire.

Conax® - Slipping clutches

The special construction feature on all Conax® CR models is the elastic pressure of the friction elements. The following charecteristics have been obtained by fitting clutches with plate type springs.

1. Limitation of peak torque upon engagement.
2. Precise setting and limitation of transmittable torque.
3. Self adjustment over a relatively wide range of wear – and therefore minimal maintenance and resetting.

The plate spring characteristic curve can be seen in Fig. 18. This means that the clutch torque in the area of the automatic adjustment path functions very smoothly.

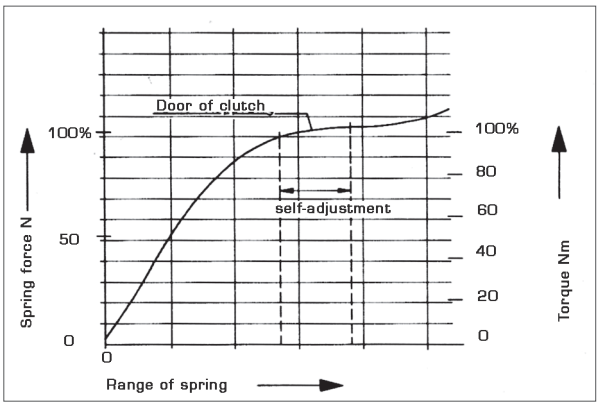

For the above-mentioned reasons care must be taken when selecting the clutch size to ensure that the plant torque to be protected is as close as possible to the specified clutch torque TÜ. If frequent slipping of the clutch is expected, attention must be paid to the thermal loading of the clutch. In this case please send us the details according to points 1-9.

It means:

F	=	Power [N]
JA	=	Moment of inertia - Driving parts [kgm²]
JL	=	Moment of inertia - Driven parts [kgm²]
n	=	Speed [rpm]
P	=	Capacity [kW]
Q	=	Friction work [J]
S	=	Operating factor
Sh	=	Number of engagement per hour [1/h]
Ta	=	Moment of acceleration [Nm]
TK	=	Nominal torque [Nm]
TL	=	Load moment [Nm]
TS	=	Max. Clutch torque [Nm] (see catalogue)
TÜ	=	Max. Transmitted torque [Nm] (see catalogue)
t	=	Slipping time [s]
tB	=	Acceleartion time [s]
tS	=	Time of engagement [s]

Safety factors "S"

Assignment of load characteristics according to type of working machine					
	DREDGERS		**RUBBER MACHINERY**		**PUMPS**
S	Bucket conveyor	S	Extruders	S	Piston pumps
S	Landing gear (caterpillar)	M	Calenders	G	Centrifugal pumps (light liquids)
M	Landing gear (rail)	S	Kneading mill	M	Centrifugal pumps (viscous liquids)
M	Manoeuvring winches	M	Mixers	S	Plunger pumps
M	Pumps	S	Rolling mills	S	Press pumps
S	Impellers		**WOOD WORKING MACHINES**		**STONE AND CLAY WORKING MACHINES**
S	Cutter heads	S	Barkers	S	Crusher
M	Slewing gear	M	Planing machines	S	Rotary ovens
	GENERATORS, TRANSFORMERS	G	Wood working machines	S	Hammer mills
M	Frequency transformers	S	Saw frames	S	Ball mills
M	Generators		**CRANES**	S	Tube mills
M	Welding generators	G	Luffing gear block	S	Beater mills
	CHEMICAL INDUSTRY	S	Travelling gear	S	Brick pressesn
M	Cooling drums	G	Hoist gear		**TEXTILE MACHINES**
M	Mixers	M	Slewing gear	M	Batchers
G	Agitators (liquid material)	M	Derricking jib gear	M	Printing and dyeing machines
M	Agitators (semi-liquid material)		**PLASIC INDUSTRY MACHINES**	M	Tanning vats
M	Drying drums	M	Extruders	M	Willows
G	Centrifuges (light)	M	Calenders	M	Looms
M	Centrifuges (heavy	M	Mixers		**COMPRESSORS**
	Oil Industry	M	Crushers	S	Piston compressors
M	Pipeline pumps		**METAL WORKING MACHINES**	M	Turbo compressors
S	Rotary drilling equipment	M	Plate bending machines		**METAL ROLLING MILLS**
	CONVEYORS	S	Plate straightening machines	S	Plate shears
M	Pit-head winches	S	Hammers	M	Manipulator for turning sheets
S	Winding engines	S	Metal planning machines	S	Ingot pushers
M	jointed-band conveyors	S	Presses	S	Ingot and slabbing-mill train
G	Belt conveyors (bulk material)	M	Shears	S	Ingot handling machinery
M	Belt conveyors (piece goods)	S	Forging presses	M	Wire drawing benches
M	Band pocket conveyors	S	Punch presses	S	Descaling machines
M	Chain conveyors	G	Countershafts, line shafts	S	Thin plate mills
M	Circular conveyors	M	Machine tools (main drives)	S	Heavy and medium plate mills
M	Load elevators	G	Machine tools (auxiliary drives)	M	Winding machines (strip and wire)
G	Bucket conveyors for flour		**FOOD INDUSTRY MACHINERY**	S	Cold rolling mills
M	Passenger lifts	G	Bottling and container filling machines	M	Chain tractor
M	Plate conveyors	M	Kneading machines	S	Billet shears
M	Screw conveyors	M	Mash tubs	M	Cooling beds
M	Ballast elevators	G	Packaging machines	M	Cross tractor
S	Inclined hoists	M	Cane crushers	M	Roller tables (light)
M	Steel belt conveyors	M	Cane cutters	S	Roller tables (heavy)
M	Drag chain conveyors	S	Cane mills	M	Roller straighteners
	BLOWERS,VENTILATORS	M	Sugar beet cutters	S	Tube welding machines
M	Rotary piston blowers	M	Sugar beet washing machines	M	Trimming shears
G	Blowers (axial/radial)		**PAPER MACHINES**	S	Cropping shears
M	Cooling tower fans	S	Couches	S	Continuous casting plant
M	Induced draught fans	S	Glazing cylinders	M	Rollers adjustment drive
G	Turbo blowers	M	Pulper	S	Manipulators
	BUILDING MACHINERY	S	Pulp grinders		**LAUNDRIES**
S	Hoists	M	Calenders	M	Tumblers
G	Concrete mixers	S	Wet presses	M	Washing machines
S	Road construction machinery	S	Willows		**WATER TREATMENT**
		S	Suction presses	M	Aerators
		S	Suction rolls	M	Screw pumps
		S	Drying cylinders		

Safety factor „S"			
Driving machine	Load symbol of application		
	U	M	H
Electric motors turbines, hydraulic motors	1,2	1,6	1,8
Piston engines 4 – 6 cylinders	2,0	2,5	2,8
Piston engines 1 – 3 cylinders	2,2	2,8	3,2

Reference value of operating factor „S"

Pneumatic operating system

Clutch Monitoring System pneumatically - mechanically actuated

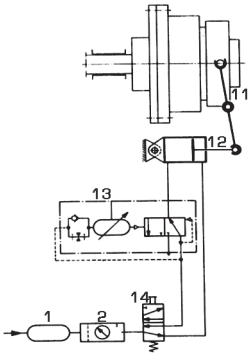

Fig. 19 pneumatical - mechanical operating device of a Conax® clutch, type CM, hand actuated and with automatic release of the operating system:

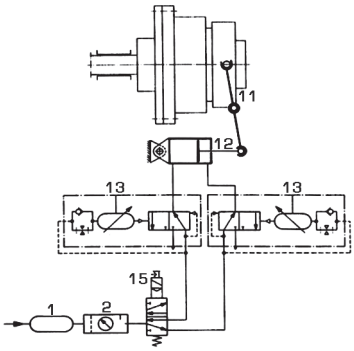

Fig. 20 pneumatical - mechanical operating device of a Conax® clutch, type CM, with electromagnetically actuated wayvalve and automatic release of the operating system: We develop and supply operating devices according to the conditions of operation.

Pneumatic elements

1. **Compressed air chamber:** Tank in which the compressed air is stored up to a maximum pressure.
2. **Maintenance unit:** The maintenance unit represents a combination of filter, pressure reducing valve and line oiler.
11. **Opertaing device**
12. **Double-actring cylinder**
13. **Time cut-out value:** These values with delay of engagement will release the operatinglever resp. the actuating collar when the clutch is engaged/ disengaged.
14. **4-way-valve:** serves for alternating connection of the main air piping to the conduit controlled and of the latter to the atmosphere.
15. **4-way magnetic valve:** serves for alternating connection of the main air piping to the conduit controlled and of the latter to the atmosphere.

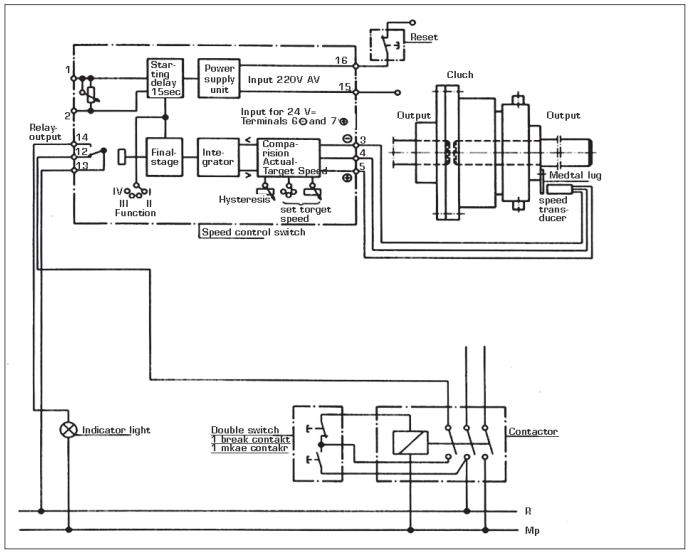

Fig. 21 Speed monitoring on the driven side of the clutch

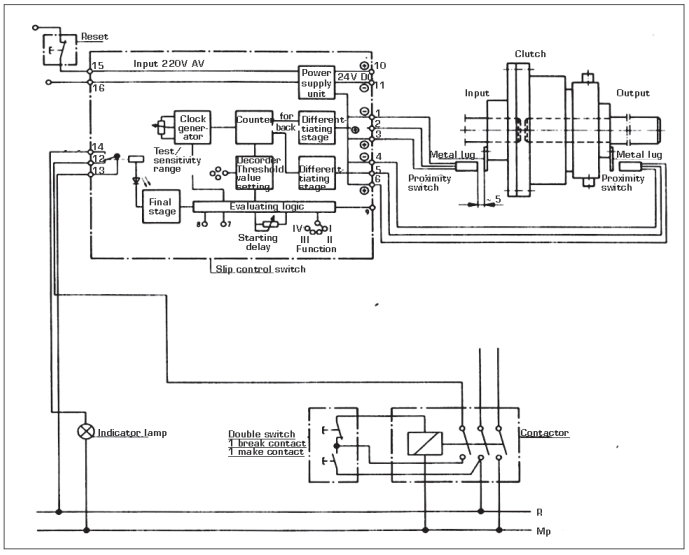

Fig. 22 Measurement of speed on the driving and driven sides of the clutch (measurement of speed diffference resp. slip monitoring)

The speed monitor performs the function of a limit speed monitor. If the speed drops below the value set in the operating system, a relay in the operating system will drop out. Acoustic signals, light signals or valves can be connected to this relay for clutch actuation purposes (Model CH).
Details available on request.

The rpm difference measuring device triggers when the difference rpm-set at the amplifier coupling device is exeeded. The rpm and the corresponding impulses on the drive and power take-off side are registered by sensors and compared within the amplifier coupling device. Once the pre-set difference rpm has been reached, the contactor built into the amplifier changes over.

Questionnaire for mechanical Conax® clutches

Inquiry No. _____ dated _____
Company _____
Road _____
Location _____
Requirements _____ pieces/ordes

Offer no. _____ dated _____
DESCH Antriebstechnik GmbH & Co. KG
Postbox 1440
59753 Arnsberg / Germany
Processed by: _____

A. Application
1) Type of application _____
2) Ambient conditions (temperature, humidity, polution etc.)
_____
_____
_____
3) Special requirements (ATEX, approval acc. to DIN EN 10204 etc.)
_____
_____
_____

B. Driving machine (Prime Mover)
1) Type of driving machine (e.g. electric motor, turbine or diesel engine) _____
2) Power _____ kW rotational speed _____ rpm
3) Nominal torque of the driving machine _____ Nm
4) Max. torque of the driving machine _____ Nm
(pull-out torque of the electric motor)
5) Nominal speed of driving machine _____ Nm
6) Maximum speed of driving machine _____ Nm
7) If a diesel engine is used: Make _____ Type _____ Number of cylinders _____
8) Flywheel and flywheel-housing connection (e. g. SAE data and perhaps sketch) _____

C. Driven machine (Driven machine)
1) Type of driven machine (e.g. generator, pump or compressor) _____
2) At what location is the clutch used? (e.g. main drive, slewing drive or suction pump) _____
3) Component between drive and driven machine for example belt drive, gear etc. i = _____

D. Clutch
1) Rotational speeds before the coupling process: driving part _____ rpm; driven part _____ rpm
2) Engaging process*
a) at a standstil ☐ b) at the full load ☐ c) Without any load ☐
3) Maximum load torque during engagement _____ Nm
4) Maximum load torque after engagement _____ Nm
5) Second-degree moment of inertia (kgm²) behind the clutch, in relation to the clutch shaft _____ kgm²
6) Is a certain acceleration time necessary ? _____ sec.
7) Number of coupling processes per hour with a uniform time distribution _____
8) Most dense engaging sequenze in the case of non-uniform time distribution
(engaging/disengaging operations per time unit) _____
9) Operating time of engagement clutch _____ hours/working day

E. Installation conditions
Send a drawing showing the arrangement of the clutch.

*Underline or put a cross against the applicable items

SMART DRIVE SOLUTIONS

CONTACT

DESCH Canada Ltd.
240 Shearson Crescent
Cambridge
Ontario
Canada N1T 1J6
T +1800 2631866
+1519 6214560
F +1519 6231169
desch.canada@desch.com

DESCH USA LP
Manufacturing,
Assembly
4940 Merrifield Pkwy
Dallas, Texas
75236
T +1 330 937 9030
F +1 330 937 9031
desch.dallas@desch.com

DESCH USA LP
Sales, Engineering,
Service Support
3700 Embassy Pkwy,
Suite 530 Akron Ohio
44333
T +1 330 937 9030
F +1 330 937 9031
sales.usa@desch.com

Technical changes reserved · © DESCH North America GmbH & Co. KG ·